PreciseFlex™ 3400 Robots

User manual

Robot Revision D

Part Number 615248, Manual Revision E

Copyright © 2026, Brooks Automation

Brooks Automation

Information provided within this document is subject to change without notice, and although believed to be accurate, Brooks Automation assumes no responsibility for any errors, omissions, or inaccuracies.

AcuLigner™, Advan Tag, AutoTeach™, ATR™, AXM™, BiSymmetrik™, CenterSmart™, Crate to Operate™, CrossingConnect™, DARTS™, Enerta™, e-RMA™, e-Spares™, e-Volution™, Falcon™, FIXLOAD™, FrogLeg™, GuardianPro™, Independent Twin Linear Exchange™, InCooler™, InLigner™, Isoport™, ITLX™, Jet™, Jet Engine™, LEAP™, LeapFrog™, LowProfile™, LPT™, M2 Nano™, Marathon 2, Marathon Express, PASIV™, Pathway™, PowerPak™, PowerTools™, PuroMaxx™, QuadraFly™, Radius™, Radient™, Radient Express™, Reliance™, Reliance ATR™, RetroEase™, SCARA™, SmartPM™, SMIF-INX™, SMIF-LPT™, SPOTLevel™, The New Pathway to Productivity™, Time Optimized Trajectory™, Time Optimal Trajectory™, Time Optimized Path™, TopCooler™, TopLigner™, VacuTran™, VersaPort™, WaferEngine™, LEAP™, Pathway™, GIO, GSB, Guidance 6600, Guidance 6430, Guidance 6420, Guidance 6410, Guidance 6000, Guidance 3400, Guidance 3300, Guidance 3200, Guidance 2600, Guidance 2400, Guidance 2300, Guidance 2200, Guidance 1400, Guidance 1300, Guidance 1200, Guidance 0200 Slave Amplifier, Guidance 0006, Guidance 0004, Guidance Controller, Guidance Development Environment, GDE, Guidance Development Suite, GDS, Guidance Dispense, Guidance Input and Output Module, Guidance Programming Language, GPL, Guidance Slave Board, Guidance System, PrecisePlace 0120, PrecisePlace 0130, PrecisePlace 0140, PreciseFlex 400, PreciseFlex 3400, PrecisePower 300, PrecisePower 500, PrecisePower 1000, PrecisePower 2000, PreciseVision, and RIO logos are trademarks of Brooks Automation.

Fusion®, Guardian®, MagnaTran®, Marathon®, Razor®, Spartan®, Vision®, Zaris®, and the Brooks and design logo are registered U.S. trademarks of Brooks Automation.

All other trademarks are properties of their respective owners.

© 2026 Brooks Automation. All rights reserved. The information included in this manual is proprietary information of Brooks Automation, and is provided for the use of Brooks customers only and cannot be used for distribution, reproduction, or sale without the express written permission of Brooks Automation.

This technology is subject to United States export Administration Regulations and authorized to the destination only; diversion contrary to U.S. law is prohibited.

Brooks Automation
15 Elizabeth Drive
Chelmsford, MA
01824-2400
Tel: +1 978-262-2400
Fax: +1 978-262-2500

Brooks Automation (Germany) GmbH
Daimler-Straβe 7
78256 Steiβlingen,
Germany
Tel: +49- 7732-9409-0
Fax: +49-7732-9409-200

Brooks Automation
46702 Bayside Pkwy
Fremont, CA 94538
Tel: +1-510-661-5000

Brooks Automation, Precise Collaborative Robots
201 Lindbergh Avenue
Livermore, CA 94551
Tel: +1-510-661-5000
Fax: +1-510-661-5166

Corporate Headquarters
15 Elizabeth Drive
Chelmsford, MA 01824 U.S.A.

Brooks Automation,
Precise Collaborative Robots
201 Lindbergh Avenue
Livermore, CA 94551 U.S.A

For Technical Support:

Location	Contact Number	Website
North America	+1-800-447-5007 (Toll Free) +1-978-262-2900 (Local) +1-510-498-1130 (Precise)	http://www.brooks.com/
Europe	+49 800 000 9347 (Toll Free Germany) +49 364 176 9999 6 (Has Toll)	
Japan	+81 120-255-390 (Toll Free) +81 45-330-9005 (Local)	
China	+86 21-5131-7066	
Taiwan	+886 080-003-5556 (Toll Free) +886 3-5525258 (Local)	
Korea	1800-5116 (Toll Free)	
Singapore	+65 1-800-4-276657 (Toll Free) +65 6309 0701 (Local)	

Copyright © 2026, Brooks Automation

Brooks Automation
15 Elizabeth Drive
Chelmsford, MA
01824-2400
Tel: +1 978-262-2400
Fax: +1 978-262-2500
www.brooks.com

Brooks Locations Worldwide:

Brooks Automation
46702 Bayside Parkway
Fremont,CA 94538
Tel: +1-510-661-5000
Fax: +1-510-661-5166

Brooks Automation
AIM Servicios Administrativos
S de RL de CV
Carretera Huinalá km 2.8
Parque Industrial Las Américas
66640 Apodaca, NL Mexico
Tel: +52 81 8863-6363

Brooks Automation (Germany) GmbH
Ernst-Ruska-Ring 11
07745 Jena, Germany
Tel: +49 3641 4821 100
Fax: +49 3641 4821 4100

Brooks Automation (Germany) GmbH
Daimler-Straße 7
78256 Steißlingen, Germany
Tel: +49-7732-9409-0
Fax: +49-7732-9409-200

Brooks Automation
9601 Dessau Road, Suite 301
Austin, TX 78754
Tel: +1 512-912-2840
Toll-Free: +1 800-367-4887

Brooks Automation (Israel) Ltd.
Mevo Yerach 5
Kiryat-Gat 82000
Israel
Tel: +972 8672 2988
Fax: +972 8672 2966

Brooks Technology (Shanghai) Limited
2nd Floor, No. 72,
887 Zuchongzhi Road
Zhangjiang Hi-Tech
Park Pudong, Shanghai
China 201203
Tel: +86-21-5131-7070
Fax: +86-21-5131-7068

Brooks Japan K.K.
HEADQUARTERS
Nisso Bldg. No 16, 9F
3-8-8 ShinYokohama, Kohoku-ku
Yokohama, Kanagawa 222-0033
Tel: +81-45-477-5570
Fax: +81-45-477-5571

Brooks Japan K.K.
YOKOHAMA TECHNICAL CENTER
852-1 Kawamuko-cho, Tsuzuki-ku
Yokohama, Kanagawa 224-0044
Tel: +81-45-477-5250
Fax: +81-45-470-6800

Brooks Japan K.K.
KUMAMOTO SERVICE OFFICE
202 Mirai Office II
312-1 Tatsudamachi Yuge
Tatsuda, Kumamoto 861-8002
Tel: +81-96-327-9720
Fax: +81-96-327-9721

Brooks CCS Japan K.K.
CONTAMINATION CONTROL SOLUTIONS
Nisso Bldg. No 16, 9F
3-8-8 ShinYokohama, Kohoku-ku
Yokohama, Kanagawa 222-0033
Tel: +81-45-477-5570
Fax: +81-45-477-5571

Brooks Automation Ltd.
TAIWANHEADQUARTERS
5F-5, No.32, Tai-Yuen Street
Chu-Pei City
Hsinchu County 302, Taiwan, R.O.C.
Tel: +886-3-552 5258
Fax (G&A): +886-3-552 5255
Fax (Sales): +886-3-552 5200

Brooks Automation Korea, Inc.
#35 Giheungdanji-Ro 121Beon-Gil
Giheung-Gu, Yongin-Si
Gyeonggi-Do, 17086
Korea
Tel : +82-31-288-2500
Fax: +82-31-287-2111

Brooks Automation CCS RS AG
Lohstampfestrasse 11
CH-8274 Tagerwilen, Switzerland
Tel: + 41 71-666-72-10
Fax: + 41 71-666-72-11

Brooks Automation Korea
#35 Giheungdanji-Ro 121Beon-Gil
Giheung-Gu, Yongin-Si
Gyeonggi-Do, 17086
Korea
Tel : +82-31-288-2500
Fax: +82-31-287-2111

Brooks Automation (S) Pte Ltd
51-18-C1 Menara BHL,
57 Jalan Ahmad Shah,
10050, Penang,
Malaysia
Tel: +60 4 3701012
Fax: +60 4 3701015

Brooks Automation (Singapore) Pte Ltd
Blk 5008 Ang Mo Kio Avenue 5
#05-08, Techplace II
Singapore 569874
Tel: +65-6836-3168
Fax: +65-6836-3177

Brooks Automation Ltd.
TAINAN OFFICE
3F., No.11, Nanke 3rd Rd., Xinshi Dist.
Tainan Science Park
Tainan City 74147, Taiwan (R.O.C.)
TEL: +886-6-505-0268
FAX: +886-6-505-5228

Brooks Automation Precise Collaborative Robotics
201 Lindbergh Drive
Livermore, CA 94551
Tel: +1-978-262-2400

Copyright © 2026, Brooks Automation

Revision History

This user manual applies only to Rev D of the PreciseFlex 3400 robot. The user manual for Rev C of the PreciseFlex 3400 robot can be found online at https://www.brooks.com/support/brooks-preciseflex-support/robots/.

Revision	ECO	Date	Action	Author
A	EC154083	April 19, 2024	Released manual at Rev. A to follow standard Brooks technical publication styles.	M. Ashenfelder
B	EC158651	November 12, 2024	Updated content for introduction of PreciseFlex 3400 with new generation electronics. Changed G1400 A/B controller references.	M. Ashenfelder
C	Agile release skipped	February 18, 2025	Corrected robot label Graphics	M. Ashenfelder
D	EC164953	July 2, 2025	Updated Safety Zone information	M. Ashenfelder
E	EC175348	July 24, 2026	Added section on the RS-485 Network Termination with Linear Rails. Updated the Spare Parts Section and removed the Unplanned Robot Movement Warning.	S. McLellan

Copyright © 2026, Brooks Automation

Table of Contents

1. Safety 1
Safety Setup 1
Explanation of Hazards and Alerts 2
Safety Text 2
Safety Icons 2
Signal Words and Colors 3
Alert Example 4
General Safety Considerations 5
Electrical Hazards 8
Ergonomic Hazards 10
Emergency Stop Circuit (E-Stop) 11
Recycling and Hazardous Materials 11
2. Overview 12
System Description and Overview 14
System Diagram and Coordinate System 16
World Origin 18
Tool Origin 18
Robot Joint Motion 19
Mounting the Robot and Linear Axis Module 21
Guidance Controller 21
Low-Voltage Power Supplies 22
Energy Dump Circuit 23
Remote Front Panel, E-Stop Box, and Manual Control Pendant 23
Machine Vision Software and Cameras 24
Machine Safety 24
Safety and Agency Certifications 24
Standards Compliance and Agency Certifications 25
Moving Machine Safety 26
Voltage and Power Considerations 26
Mechanical and Software Limit Stops 27
Stopping Time and Distance 28
Safety Zones 29
Releasing a Trapped Operator: Brake Release Switch 29
Explanation of the Product Label 30
Example Sections from the Product Label 31
P/N - Product Number Scheme 34
Serial Number (SN) Scheme 35
Facilities Panel 36
World Coordinates, Joint Directions, and Tool Coordinates 38
Compatible Accessories 42
Optional Linear Axis Module 43
IntelliGuide Servo Grippers 43
IntelliGuide Vision Grippers 44

Copyright © 2026, Brooks Automation

3. Installation Information 46
Setup and Operation 46
Unpacking and Handling Instructions 46
Mounting Instructions 46
Work Envelope 48
Tool Mounting 49
ISO Flange for End-of-Arm Tooling 50
Power Requirements 51
Accessing the Robot Controller 51
Environmental Specifications 52
Emergency Stop 52
4. Hardware Reference 53
E-stop Connector 53
MCP Interface 54
Digital Input and Output Signals 55
Digital Input Signals 55
Digital Output Signals 57
IO in Base of Robot (GIO) 58
Ethernet Interface 60
RS-232 Serial Interface 61
RS-485 Network Termination with Linear Rails 62
5. Software Reference 65
Accessing the Web Server 65
Loading a Project (Program) or Updating PAC Files 67
Calibrating the Robot: Setting the Encoder Zero Positions 69
Recovering from Corrupted PAC Files 74
Appendices 78
Appendix A: Conditions of Acceptability 78
Appendix B: Product Specifications 80
Appendix C: PreciseFlex 3400 Spare Parts List 82
Appendix D: Preventative Maintenance 83
Appendix E: Safety Circuits for PreciseFlex 3400 3 kg Payload 85
Appendix F: Low Voltage Option 87
High Power Enable Signal 89
Integrating High Power Enable 89
Example Integration 90
Disabling High Power Enable 91
Appendix G: Optional IO FFC in Outer Link 95
Digital Outputs 96
Digital Inputs 97
Vacuum Sensor Inputs 97
Appendix H: Table A2 from ISO/TS 15066: 2016, Biomechanical Limits 100
Appendix I: Torque Values for Screws 102

Copyright © 2026, Brooks Automation

1. Safety

Safety Setup

Brooks uses caution, warning, and danger labels to convey critical information required for the safe and proper operation of the hardware and software. Read and comply with all labels to prevent personal injury and damage to the equipment.

DANGER

Read the Safety Chapter

Failure to review the *Safety* chapter and follow the safety warnings can result in serious injury or death.

- All personnel involved with the operation or maintenance of this product must read and understand the information in this safety chapter.
- Follow all applicable safety codes of the facility as well as national and international safety codes.
- Know the facility safety procedures, safety equipment, and contact information.
- Read and understand each procedure before performing it.

Copyright © 2026, Brooks Automation

Explanation of Hazards and Alerts

This manual and this product use industry standard hazard alerts to notify the user of personal or equipment safety hazards. Hazard alerts contain safety text, icons, signal words, and colors.

Safety Text

Hazard alert text follows a standard, fixed-order, three-part format.

- Identify the hazard
- State the consequences if the hazard is not avoided
- State how to avoid the hazard.

Safety Icons

- Hazard alerts contain safety icons that graphically identify the hazard.
- The safety icons in this manual conform to ISO 3864-1:2011 *Graphical symbols — Safety colours and safety signs* and ANSI Z535 standards.

Safety Icon Examples	
	Warning
	Two-Person Lift
	Electric Shock

Copyright © 2026, Brooks Automation

Signal Words and Colors

Signal words and colors inform of the level of hazard.

DANGER	Danger indicates a hazardous situation which, if not avoided, **will result in serious injury or death**. The Danger signal word is white on a red background with an exclamation point inside a yellow triangle with black border.
WARNING	Warning indicates a hazardous situation which, if not avoided, **could result in serious injury or death**. The Warning signal word is black on an orange background with an exclamation point inside a yellow triangle with black border.
CAUTION	Caution indicates a hazardous situation or unsafe practice which, if not avoided, **may result in minor or moderate personal injury**. The Caution signal word is black on a yellow background with an exclamation point inside a yellow triangle with black border.
NOTICE	Notice indicates a situation or unsafe practice which, if not avoided, **may result in equipment damage**. The Notice signal word is white on blue background with no icon.

Copyright © 2026, Brooks Automation

Alert Example

The following is an example of a Warning hazard alert.

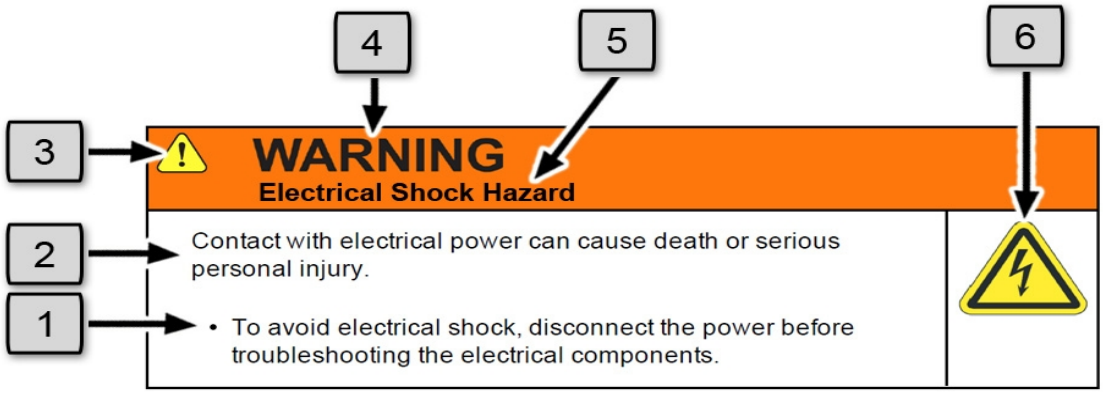

Number	Description
1.	How to Avoid the Hazard
2.	Source of Hazard and Severity
3.	General Alert Icon
4.	Signal Word
5.	Type of Hazard
6.	Hazard Symbol(s)

Copyright © 2026, Brooks Automation

General Safety Considerations

WARNING

Robot Mounting

Before applying power, the robot must be mounted on a rigid test stand, secure surface, or system application. Improperly mounted robots can cause excessive vibration and uncontrolled movement that may cause equipment damage or personal injury.

- Always mount the robot on a secure test stand, surface, or system before applying power.

WARNING

Do Not Use Unauthorized Parts

Using parts with different inertial properties with the same robot application can cause the robot's performance to decrease and potentially cause unplanned robot motion that could result in serious personal injury.

- Do not use unauthorized parts.
- Confirm that the correct robot application is being used.

WARNING

Magnetic Field Hazard

This product contains magnetic motors that can be hazardous to implanted medical devices, such as pacemakers, and cause personal harm, severe injury, or death.

- Maintain a safe working distance of 30 cm from the motor when with an energized robot if you use a cardiac rhythm management device.

Copyright © 2026, Brooks Automation

CAUTION

Unauthorized Service

Personal injury or damage to equipment may result if this product is operated or serviced by untrained or unauthorized personnel.

- Only qualified personnel who have received certified training and have the proper job qualifications are allowed to transport, assemble, operate, or maintain the product.

CAUTION

Damaged Components

The use of this product when components or cables appear to be damaged may cause equipment malfunction or personal injury.

- Do not use this product if components or cables appear to be damaged.
- Place the product in a location where it will not get damaged.
- Route cables and tubing so that they do not become damaged and do not present a personal safety hazard.

CAUTION

Inappropriate Use

Use of this product in a manner or for purposes other than for what it is intended may cause equipment damage or personal injury.

- Only use the product for its intended application.
- Do not modify this product beyond its original design.
- Always operate this product with the covers in place.

Copyright © 2026, Brooks Automation

CAUTION

Seismic Restraint

The use of this product in an earthquake-prone environment may cause equipment damage or personal injury.

- The user is responsible for determining whether the product is used in an earthquake prone environment and installing the appropriate seismic restraints in accordance with local regulations.

Copyright © 2026, Brooks Automation

Electrical Hazards

Refer to the specifications of the *Guidance Controller Quick Start Guide* for the electrical power.

DANGER

Electrical Shock Hazard

Contact with electrical power can cause personal harm and serious injury.

- To avoid electrical shock, disconnect the power before troubleshooting the electrical components.
- Check the unit's specifications for the actual system power requirements and use appropriate precautions.
- Never operate this product without its protection covers on.

WARNING

Electrical Burn

Improper electrical connection or connection to an improper electrical supply can result in electrical burns resulting in equipment damage, serious injury, or death.

- Always provide the robot with the proper power supply connectors and ground that are compliant with appropriate electrical codes.

WARNING

Electrical Fire Hazard

All energized electrical equipment poses the risk of fire, which may result in severe injury or death. Fires in wiring, fuse boxes, energized electrical equipment, computers, and other electrical sources require a Class C extinguisher.

- Use a fire extinguisher designed for electrical fires (Class C in the US and Class E in Asia).
- It is the facility's responsibility to determine if any other fire extinguishers are needed for the system that the robot is in.

Copyright © 2026, Brooks Automation

NOTICE

Improper handling of the power source or connecting devices may cause component damage or equipment fire.

- Connect the system to an appropriate electrical supply.
- Turn off the power before servicing the unit.
- Turn off the power before disconnecting the cables.

Copyright © 2026, Brooks Automation

Ergonomic Hazards

CAUTION

Heavy Lift Hazard

Failure to take the proper precautions before moving the robot could result in back injury and muscle strain.

- Use a lifting device and cart rated for the weight of the drive or arm.
- Only persons certified in operating the lifting device should be moving the product.

CAUTION

Tipover Hazard

This product has a high center of gravity which may cause the product to tip over and cause serious injury.

- Always properly restrain the product when moving it.
- Never operate the robot unless it is rigidly mounted.

CAUTION

Trip Hazard

Cables for power and communication and facilities create trip hazards which may cause serious injury.

- Always route the cables where they are not in the way of traffic.

Copyright © 2026, Brooks Automation

Emergency Stop Circuit (E-Stop)

The integrator of the robot must provide an external emergency stop switch.

WARNING

Emergency Stop Circuit

Using this product without an emergency stop circuit may cause personal injury.

- Customer is responsible for integrating an emergency stop circuit into their system.
- Do not override or bypass the emergency stop circuit.

Recycling and Hazardous Materials

Brooks Automation complies with the EU Directive 2002/96/EU Waste Electrical and Electronic Equipment (WEEE).

The end user must responsibly dispose of the product and its components when disposal is required. The initial cost of the equipment does not include cost for disposal. For further information and assistance in disposal, email Brooks Automation Technical Support at support_preciseflex@brooks.com.

Copyright © 2026, Brooks Automation

2. Overview

The PreciseFlex 3400 is at the forefront of human-robot collaboration with advanced features that ensure both functionality and safety for seamless collaboration with humans. This versatile robot, with its wide range of applications, can be seamlessly integrated into various industrial settings. The PreciseFlex 3400 is designed for adaptability with optional accessories, such as a linear rail for extended reach and flexibility and a servo gripper for enhanced gripping capabilities.

This user manual provides comprehensive guidance on operating and optimizing the PreciseFlex 3400 to ensure a smooth and productive integration into your workspace.

The PreciseFlex 3400 Robot is a 4-axis robot that may optionally include an electric or pneumatic gripper.

Copyright © 2026, Brooks Automation

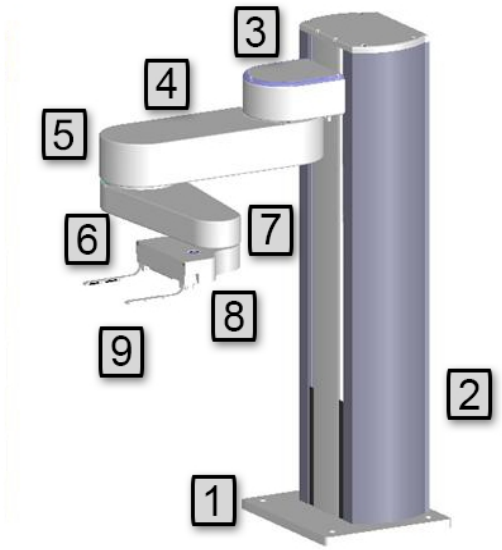

Number	Name	Description
1	Base Plate	Plate to attach robot to table
2	Z Column	Vertical column
3	Shoulder	Moves up and down column, rotates Inner Link
4	Inner Link	Inner Link
5	Elbow	Joint between Inner and Outer Links
6	Outer Link	Outer Link
7	Wrist	Joint between Outer Link and Gripper
8	Gripper	Gripper mechanism
9	Fingers	Fingers for grasping Titer Plates

Copyright © 2026, Brooks Automation

System Description and Overview

The PreciseFlex 3400 Robot is a four-axis robot that includes an embedded Guidance four-axis motion controller, a 48 VDC motor power supply, and a 24 VDC logic power supply located inside the base of the robot. In addition, it may optionally include an electric gripper and electric gripper controller. See the *IntelliGuide Grippers* user manual.

The Z-axis of this robot is available with a standard travel of 400 mm and an optional travel of 750 mm and 1160 mm. The robot is designed as tabletop unit and can carry a payload of up to 2.5 kg without a gripper. These robots are low cost, extremely quiet and smooth, very reliable, and have excellent positioning repeatability. To achieve these results, the axes are powered by brushless DC motors with absolute encoders. With these characteristics, these robots are ideal for automating applications in the Life Sciences, Medical Products, Semiconductor, and Electronics industries.

A number of communications and hardware interfaces are provided with the basic robot. These include an RS-232 serial interface, an RS-485 serial interface, an Ethernet interface, and a number of digital input and output lines. In addition, the robot can be purchased with several types of optional PreciseFlex peripherals. These include digital cameras, remote I/O, and a hardware manual control pendant.

The controller is programmed by means of a PC connected through Ethernet. There are three programming modes: a Digital IO (PLC) mode, an Embedded Language mode, and a PC Control mode. When programmed in the PLC or Embedded Language mode, the PC can be removed after programming is completed and the controller will operate standalone. The PC is required for operation in the PC Control mode.

In all modes of operation, the controller includes a web based operator interface. This interface is used for configuring the system, starting and stopping execution, and monitoring its operation. The web interface can be accessed locally using a browser or remotely via the Internet. This remote interface is of great benefit in system maintenance and debugging.

Copyright © 2026, Brooks Automation

The optional machine vision system, PreciseVision, can execute in a PC connected through Ethernet. PreciseVision requires cameras connected via Ethernet or USB, allowing any processor on the network to obtain and process information from any camera on the network, and provide the results to any networked motion controller.

The PreciseFlex 3400 and has a rated payload of 3 kg grams without a gripper. The 3 kg payload includes the gripper. For example, the optional 60 N Electric Gripper weighs 1 kg, so with this gripper the workpiece payload is 2 kg. See the *IntelliGuide Grippers* user manual.

Note that for the PreciseFlex 3400, it is important to set the correct value for the payload in the Dynamic Feed Forward parameter 16071 (or use the GPL “Robot.Payload” property). 100% equals 3 kg for the gripper and payload mass. For lighter masses, this value should be reduced. Setting the payload correctly is important both for optimal dynamic performance of the robot and also for proper gravity compensation, including “free” mode.

Also, it is important to set the correct offset distance in value 5 of parameter 16068, in mm, for the distance of the center of mass of the gripper and payload from the J4 axis of rotation. For example, if the center of a 2 kg mass is 100 mm from the center of rotation of axis 4 (the wrist), this value should be set to 100 mm, for the Dynamic Feed Forward calculations to compute the correct feed forward motor torques and achieve optimal performance. For pick and place applications, the property “robot.payload” can be written by the application program to change the payload. Note that when setting the payload and gripper payload offset parameters in the database, these values must be entered, saved to flash, and the controller must be re-booted for them to take effect.

The PreciseFlex 3400 has:

- 8 inputs and 8 outputs available at the base connector panel in a 25 pin Dsubminiature connector
- 4 digital outputs and up to 2 digital inputs available in the outer link when the pneumatic version is ordered.

Copyright © 2026, Brooks Automation

The PreciseFlex 3400 is nominally quoted and shipped with:

- a standard ISO flange
- a single solenoid valve mounted in the outer link for users to add pneumatic or vacuum grippers of their design.

You can also order the PreciseFlex 3400 configured with these products:

- IntelliGuide s23/ s23D/ s60 servo grippers
- IntelliGuide v23/ v60 vision grippers

See the *IntelliGuide Grippers* user manual for more information about grippers. Also see System Dimensions for reference dimensions.

System Diagram and Coordinate System

The robot has two important coordinate systems, World and Tool. The World system is the base coordinate system that everything else is based off of and the tool coordinate system is a transform from the World coordinate system to the robots tool center point. See the graphics below.

Copyright © 2026, Brooks Automation

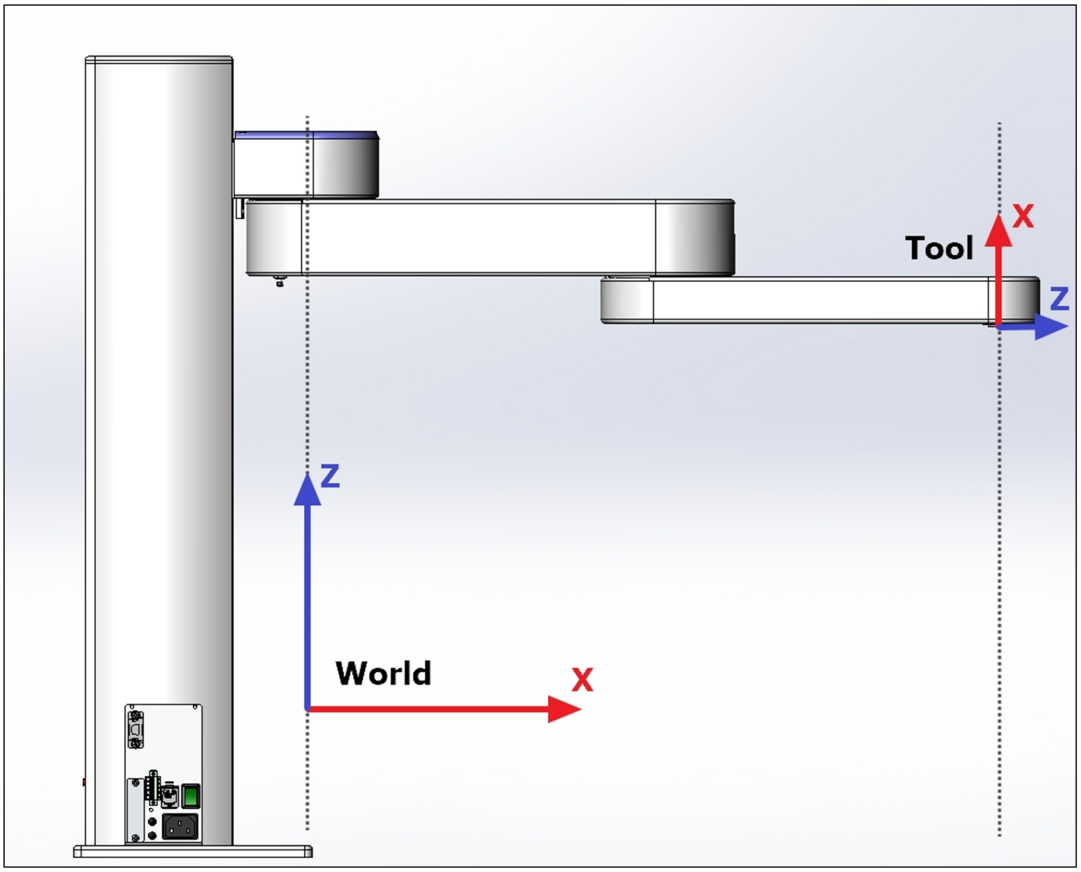

Robot Coordinate Systems (PF400 Example)

Copyright © 2026, Brooks Automation

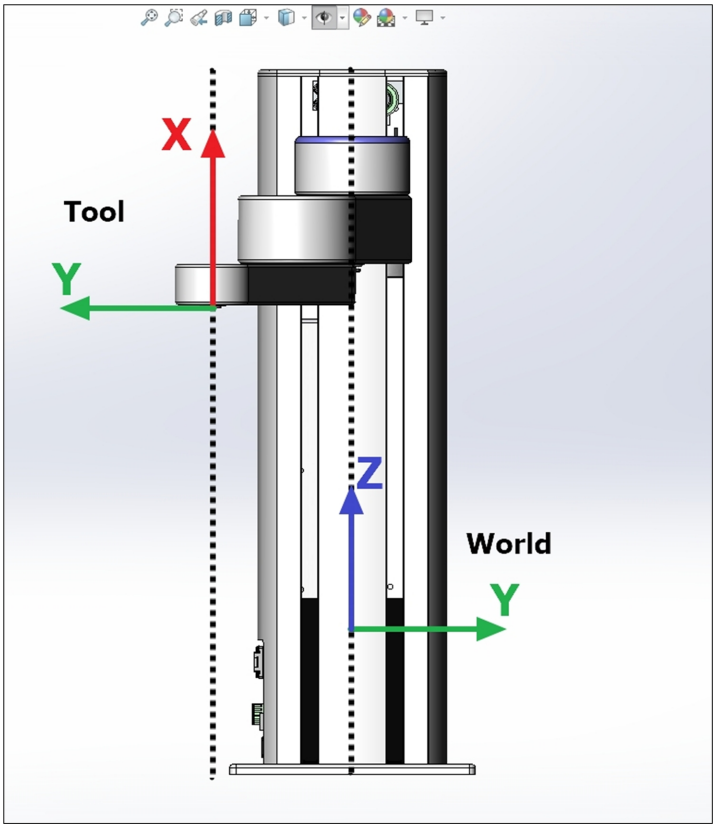

Robot Coordinate Systems (PF400 Example)

World Origin

The center of the World coordinate system is call the World Origin. It is commonly referred to as World (0,0,0,0,0,0) location. The location can be found where the centerline of the robots first rotary joint, intersects the plane of the robots tool flange when the Z carriage is at it's lowest point against the hard stop. This location is different for each and every robot model.

Tool Origin

The center of the Tool coordinate system is call the Tool Origin. The tool origin, commonly referred to as Tool (0, 0, 0, 0, 0, 0) location, can be found where the center of the wrist rotary

Copyright © 2026, Brooks Automation

axis, intersects the robot tool flange, and moves with robot. The Z axis points towards the alignment dowel pin, while the X axis Point up the rotary axis.

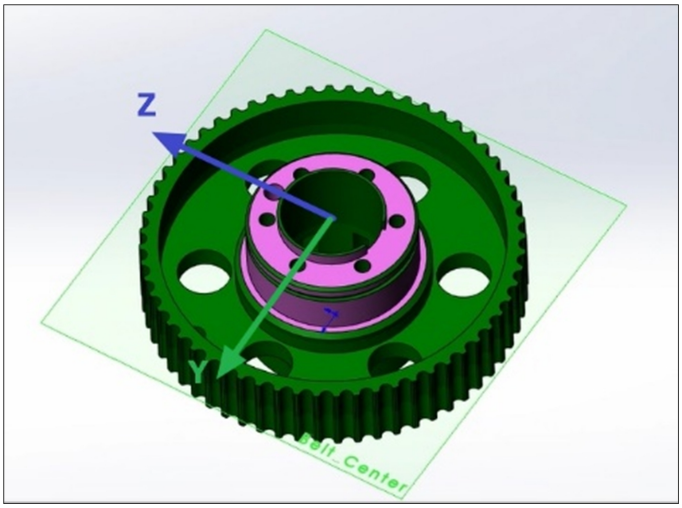

The Tool Origin with Respect to the Final Drive Pully (PF400 Example)

Robot Joint Motion

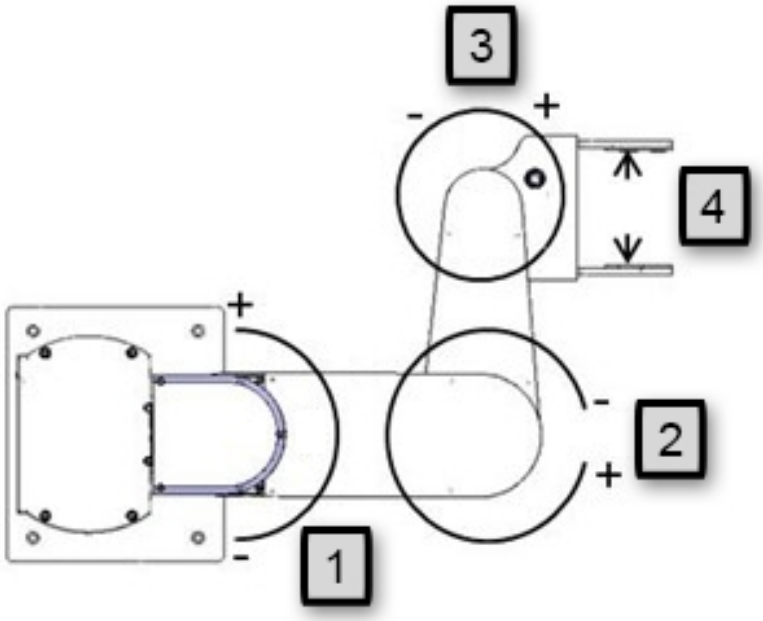

Example with Four-Axes Robots

Copyright © 2026, Brooks Automation

Number	Axis	Description of Motion
1.	Shoulder	Rotates 180°
2.	Elbow	Rotates 334°
3.	Wrist	Rotates +/- 970°
4.	Gripper	Opens from 77 mm to 133 mm. Positive (+) opens, and negative (-) closes.

The first axis of the robot, J1, moves the robot arm up along the Z Column, which is the Z-axis. When inner link is closest to the bottom, the Z-axis is at its 0 position in the Joint Coordinate system and Z=30 mm in the World Coordinate system. As the robot arm moves upwards, both its joint position and the World Z Coordinate increase in value.

The Z column also contains the 24 VDC and 48 VDC power supplies and the connector panel. The Guidance controller is located inside the inner link of the robot, and the gripper controller is located inside the outer link.

When the Inner Link is centered on its range of motion the J2 axis is at its 0 joint angle. A positive change in the axis angle results in a positive rotation about the World Z-axis.

The J3 rotary axis (elbow) rotates the outer link about the world Z-axis. A positive change in the axis angle results in a positive rotation about the World Z-axis. When the link is centered, it is at its 0 joint angle, however there is a hard stop at 10 degrees, so the link cannot reach the center position. The outer link can rotate underneath the inner link, allowing the robot to change configuration from a “left hand” robot to a “right hand” robot without swinging the J3 axis (elbow) through the zero position. This allows the robot to work in very compact workcells.

Copyright © 2026, Brooks Automation

The J4 rotary axis (wrist) rotates the gripper about the World Z-axis. A positive change in the axis angle results in a positive rotation about the World Z-axis.

The outer link may include a gripper controller that provides control of the optional electric gripper. It is also possible to order the robot with a pneumatic gripper, in which case the outer link will house a solenoid to control air to the pneumatic gripper. A light bar is mounted at the top of the shoulder cover (or column for some robots) and blinks at a rate of once per second to indicate that the controller is operational and at a rate of 4 times per second when power is being supplied to the motors.

The Z-axis includes a fail-safe brake. This brake must be released to move the Z-axis up and down manually. There is a manual brake release button on the bottom of the inner link near the Z-axis. Depressing this button when 24 VDC power is on will release the Z-axis brake while the button is depressed. It is not necessary for the control system to be operating for the brake release to function; the only requirement is providing 24 VDC to the controller. Care should be taken to support the Z-axis when the brake release button is pushed, as the axis will fall due to gravity.

Mounting the Robot and Linear Axis Module

The Robot Base Plate contains a mounting hole pattern for (4) M6 screws along with reference surfaces for locating the robot on a table or work cell surface. The Linear Axis Module contains mounting patterns for both M6 and ¼-20 screws. See "Installation Information" for details.

Guidance Controller

The Guidance Controller is a 4-axis general purpose motion controller that contains four motor drives and four encoder inputs. It must be attached to a heat sink. The heat sink is provided by the inner link housing. The controller includes local digital IO. It also supports RS-232 and RS-485 serial communication and an optional PreciseFlex Remote IO module. It contains two

Copyright © 2026, Brooks Automation

Ethernet ports. The controller and power supplies are shown in the system diagram in the figure below.

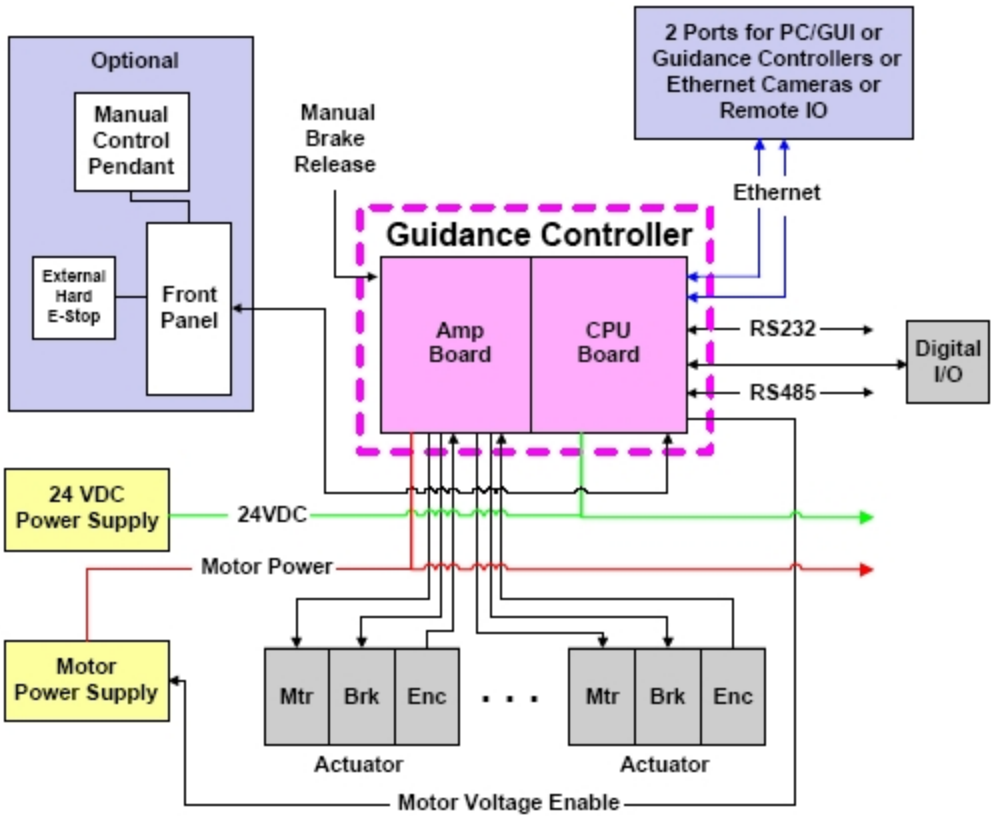

For detailed information on the controller, including interfacing information, see the *Guidance Controllers* user manual.

Low-Voltage Power Supplies

The PreciseFlex 3400 Robot has an integrated 150 Watt, 24 VDC Power Supply that accepts a range of AC input from single-phase 90 V to 264 V and an integrated 500 W, 48 VDC Power Supply for the motors.

Copyright © 2026, Brooks Automation

DANGER

High Voltage

In addition to exposed high voltage pins and components, the heat sinks on the Power Supplies are not grounded and expose high voltage levels. AC power to the robot must be disconnected prior to accessing these units.

Energy Dump Circuit

The 48 VDC supply has a regulated output and an overvoltage protection circuit that is triggered if the voltage reaches 60 Volts. Rapid deceleration of the robot motors can generate a Back EMF voltage that can pump up the motor voltage bus. In order to avoid bus pump up, an Energy Dump Circuit is connected to the 48 VDC bus.

Remote Front Panel, E-Stop Box, and Manual Control Pendant

The PreciseFlex 3400 has two optional safety accessories: an E-Stop Box and a portable Manual Control Pendant that includes an E-Stop button. The E-Stop box can be plugged into the green Phoenix connector in the connector panel in the base of the robot. See the "Facilities Panel". The E-Stop box completes a circuit from the top pin, Pin 1 (24 VDC) to Pin 2 (E-Stop) in this connector. If this circuit is not completed it is not possible to enable motor power to the robot.

The Manual Control Pendants (product number PP10-EP-00013) can be plugged directly into the 9-pin Dsub connector mounted on the robot's Facilities Panel in the base of the robot. If no E-Stop box or Manual Control Pendant is connected, a jumper must be connected between these two pins to enable robot motor power. For those applications where an operator must be inside the working volume of the robot while teaching, a second teach pendant with a 3-position

Copyright © 2026, Brooks Automation

run hold switch is available. The E-Stop connections are also present on the 9-pin Dsub connector and each of these units provides the hardware signals to permit power to be enabled and disabled.

E-Stop Box

Manual Control Pendant

Machine Vision Software and Cameras

The PreciseFlex 3400 robot is available with the IntelliGuide Vision Grippers with embedded cameras. See the *IntelliGuide Gripper User Manual* for details.

Machine Safety

Safety and Agency Certifications

PreciseFlex systems can include computer-controlled mechanisms that are capable of moving at high speeds and exerting considerable force. Like all robot and motion systems, and most industrial equipment, they must be treated with respect by the user and the operator.

This manual should be read by all personnel who operate or maintain PreciseFlex systems, or who work within or near the work cell.

Copyright © 2026, Brooks Automation

Read ISO 10218-1:2011 and 10218-2:2011 *Robots for Industrial Environments, Safety Requirements*, ISO/TS 15066 *Robots and Robotic Devices – Collaborative Robots*, and ISO 13849-1:2006 *Safety of machinery — Safety-related parts of control systems*.

Standards Compliance and Agency Certifications

The PreciseFlex robots are intended for use with other equipment and are considered a subassembly rather than a complete piece of equipment on their own. They meet the requirements of these standards:

- EN ISO 10218-1-2011 Robots for Industrial Environments, Safety Requirements
- EN 60204-1 Safety of Machinery, Electrical Equipment of Machines
- EN 61000-6-2 EMC Directive (Immunity)
- EN 61000-6-4 EMC Directive (Emissions)
- EN 61326-1:2013
- CAN/CSA-C22.2 No. 61010-1-12 UPD1:2015, UPD2:2016, AMD1:2018
- CSA-C22.2 No. 61010-2-081:19
- UL 61010-1 (3rd Ed.), AMD1(2018)
- UL 61010-2-081 (3rd Ed.)

To maintain compliance with the above standards the controller must be installed and used in accordance with the regulations of the standards, and in accordance with the instructions in this user's guide.

In addition to the above standards, the PreciseFlex 3400 robots have been designed to comply with the FCC Class A emissions requirements and ANSI/RIA R15.06 Safety Standards, and they carry the CE and CSA certification marks.

Copyright © 2026, Brooks Automation

CE Mark

CSA Mark

Moving Machine Safety

The PreciseFlex robots can operate in Manual Control Mode, in which an operator directly controls the motion of the robot, or Computer Control Mode in which the robot operation is automatic. Manual Control Mode is often used to teach locations in the robot workspace. The robot's speed is limited in Manual Control Mode to a maximum of 250 mm per second for safety. While the PreciseFlex 3400 is a collaborative robot that can only apply approximately 20-60 Newtons of force, it is very important for operators to keep their hands, arms and especially their head out of the robot's operating volume. It is important that operators wear safety glasses when inside the robot's operating volume.

In Computer Mode, the robot can move quickly. The PF 3400 robots have been designed to be "hand-safe" even in computer mode, and in some cases a risk assessment of the application may indicate that it can be used without operator safety screens. However, safety glasses should be worn at all times when an operator is within the robots working volume. Refer to the EN ISO 10218-2-2011 *Robots for Industrial Environments, Safety Requirements* for information on recommended safe operating practices and enclosure design for robots of various sizes and payloads.

Voltage and Power Considerations

The Guidance controller requires two DC power supplies, a 24 VDC power supply for the processor and user IO, and a separate 48 VDC motor power supply.

Copyright © 2026, Brooks Automation

DANGER

Electrical Shock

The Guidance Controller, the 48 VDC, and the 24 VDC power supplies are all open frame electrical devices that contain unshielded high voltage pins, components and surfaces. These products are intended to be mounted in a cabinet or machine chassis that is not accessible when AC line power is turned on.

The PreciseFlex 3400 power supplies have an input range of 100 to 240 VAC, +/- 10%, 50/60 Hz. Inrush current can be as high as 100 Amps at 240 VAC for short periods of time. The power supplies are protected against voltage surge to 2000 Volts. Transient over voltage (< 50 µs) may not exceed 2000 V phase to ground, as per EN61800-31996. The power supplies have over-current protection, and over-voltage protection. The robot consumes less than 200 Watts during normal operation.

The PreciseFlex controller can monitor motor power through its datalogging function. Intermittent power dropouts can be detected by setting a trigger in the data logger which can record and time-stamp power fluctuations.

Mechanical and Software Limit Stops

The Z column, shoulder, and elbow have hard limit stops at the end of travel which are factory installed. The soft-limit stops must be set within the range of these hard stops. The wrist axis has a slip ring when the electric gripper is installed, allowing unlimited rotation. However, software stops limit rotation to plus or minus 970 degrees. Since the robot has absolute encoders with battery backup, even if the robot is turned off, the encoders keep track of joint position. If the wrist axis is rotated manually beyond the 970 degree software limit stops, it will be necessary to rotate it back to within the allowed software limits before the robot will run. The joint position can be viewed either on the optional Manual Control Pendant, or in the Virtual Manual Control Pendant in the Web Based Operator Interface. (See *Guidance Controller Setup*

Copyright © 2026, Brooks Automation

and Operation Quick Start Guide) For pneumatic configurations a sliding hard stop limits the wrist rotation to 540 degrees.

Stopping Time and Distance

The robot control system responds to two types of E-Stops.

Soft E-Stop

A "Soft E-Stop" initiates a rapid deceleration of all robots currently in motion and generates an error condition for all GPL programs that are attached to a robot. This property can be used to quickly halt all robot motions in a controlled fashion when an error is detected. A soft E-Stop is typically generated by an application program under conditions determined by the programmer.

This function is similar to a "Hard E-Stop" except that soft E-Stop leaves High Power enabled to the amplifiers and is therefore used for less severe error conditions. Leaving power enabled is beneficial in that it prevents the robot axes from sagging and does not require high power to be manually re-enabled before program execution and robot motions are resumed. This function is also similar to a Rapid Deceleration feature except that a Rapid Deceleration only affects a single robot and no program error is generated.

If set, the **SoftE-Stop** property is automatically cleared by the system if High Power is disabled and re-enabled.

Hard E-Stop

A Hard E-Stop is generated by one of several hardware E-Stop inputs and causes motor power to be disabled. However, there is a parameter that determines a delay between the time the hard E-Stop signal is asserted and the time the motor power supply relay is opened. This delay is nominally set at 0.5 seconds. It may be adjusted by an operator with administrator privileges. On the web based operator interface menu, go to Setup/Parameter

Copyright © 2026, Brooks Automation

Database/Controller/Operating Mode/ and set parameter 267 to the desired delay. If this delay is set to 0, the high-power relay will be disabled within 1ms.

For the PreciseFlex 3400 robot, the shoulder, elbow, and wrist axes do not have mechanical brakes. Therefore, leaving the motor power enabled for 0.5 sec allows the servos to decelerate the robot. The servos will typically decelerate the robot at 0.12G, or 1250 mm/sec^2. If the robot is moving at a speed of 500 mm/sec, the distance traveled will be 100 mm to reach a full stop, and the time will be 0.4 sec.

Safety Zones

Safety zones on PreciseFlex robots stop robot motion and disable motor power if the tool center point (TCP) enters or leaves a designated area. When triggered, these zones cause a sudden deceleration, which depends on the setting in “RapidDecel deceleration in %” (Parameter Database ID 2101) and the robot's speed.

Safety zones are not intended to stop the robot during normal operation conditions and will not control the robot’s TCP speed.

For configuration details, search for "Safety Zones" in the Online Help section of the Brooks Automation website at https://www2.brooksautomation.com/.

Releasing a Trapped Operator: Brake Release Switch

Should a hard E-Stop be triggered, the Z brake will engage, and motor power will be disconnected from all motors. As the J2, J3, and J4 axes have no brakes, they may be freely pushed by the operator. To release the Z brake, the operator may press the brake release switch, under the inner link, as long as 24 VDC is present. It is not necessary for motor power to be on for the brake release to work.

Copyright © 2026, Brooks Automation

Brake Release Switch

Explanation of the Product Label

The Product Label is on the robot interface panel at the base of the robot. Use the following sections to decode the Part Number and Serial Numbers .

Copyright © 2026, Brooks Automation

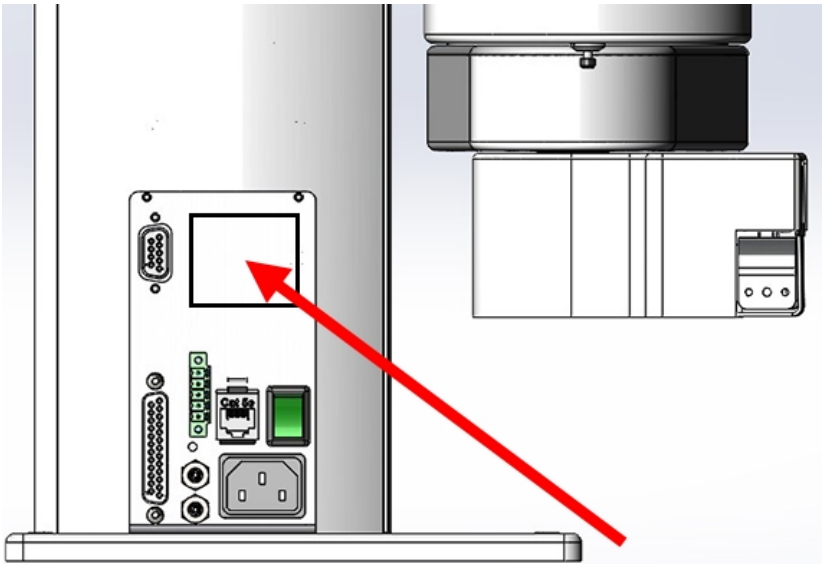

Product Label at the Base of the Robot

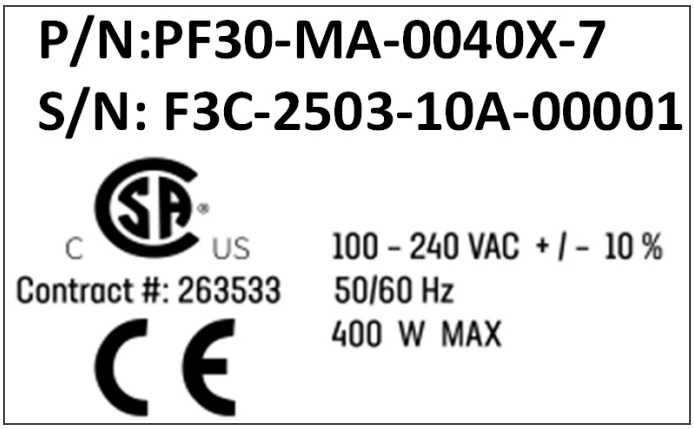

Sample Robot Product Label

Example Sections from the Product Label

Product Number

Copyright © 2026, Brooks Automation

In the example above, the first line of the label -- Product Number (P/N) -- describes these properties of its product.

- PF30 – PreciseFlex 3400
- MA = Machine Assembly
- 0040 = PreciseFlex 400/3400 family of robots
- X = Extended reach
- 7 = 750 mm Z Stroke
- <None> = Not Low Voltage

Refer to the "P/N - Product Number Scheme" table for detailed information about the Product Number naming scheme.

Serial Number

S/N: F3C-2503-10A-00001

In the example above, the second line of the label -- Serial Number (S/N) -- describes these properties of its product:

- F3C = PreciseFlex 3400
- 25 = Two-Digit Year Code
- 03 = Two-Digit Month Code
- 10A = Revision
- 04318 = Robot Unit Build Number

Refer to the "Explanation of the Product Label" table for detailed information about the Serial Number naming scheme.

Copyright © 2026, Brooks Automation

The symbol for the CSA Group Standards Organization. See Standards Compliance and Agency Certifications for more information.

Contract #: 263533

Brooks Automation's Contract ID within the CSA Group

The CE Marking affirms compliance with relevant EU legislation. See Standards Compliance and Agency Certifications for more information.

A 100 - 240 VAC + / - 10 %
B 50/60 Hz
C 400 W MAX

Robot Power Requirements

Letter	Description
A	Robot power voltage requirements.
B	Robot power frequency requirements
C	Robot power maximum draw

Copyright © 2026, Brooks Automation

P/N - Product Number Scheme

The robot product number follows the scheme: AAAA-BB-CCCCD-EFF. Refer to the table below to decode this scheme.

AAAA	
CODE	**PRODUCT**
PP00	PrecisePlace 100
PP0S	PrecisePlace 100 (w/ Servo Gripper)
PF0S	PreciseFlex 400
PF30	PreciseFlex 3400
PFD0	Direct Drive Robot
PFC0	C-Series
PF0X	Linear Rail
BB	
CODE	**TYPE**
MA	Machine Assembly
CCCC	
CODE	**TYPE**
PF0S	0040 = PreciseFlex 400
PF30	0040 = PreciseFlex 3400
PFD0	0040 = Direct Drive 4 0060 = Direct Drive 6
D	
CODE	**ARM LENGTH**
0 / S	Standard
X / L	Extended / Long
E	
NUMBER	**AXIS SIZE**
4	400 mm Z Stroke
7	750 mm Z Stroke
12	1160 mm Z Stroke
10	1.0 m rail

Copyright © 2026, Brooks Automation

15	1.5 m rail
20	2.0 m rail
FF (Optional)	
CODE	**Description**
LV	Low Voltage

Serial Number (SN) Scheme

The robot serial number follows the scheme: AAA- BBCC- EF-GGGG. Refer to the table below to decode this scheme.

AAA	
CODE	**MODEL**
P00	PrecisePlace 100
P0S	PrecisePlace 100 (w/ Servo Gripper)
F0C/F0X	PreciseFlex 400
F3C	PreciseFlex 3400
FC0	C-Series
FXB	Linear Rail
BBCC	
CODE	**MFG DATE CODE (START DATE)**
BB	Two-Digit Year Code
CC	Two-Digit Month Code
EF	
Code	**Rev Code**
E	Major Rev Code
F	Minor Rev Code Valid for Rev Code 9J and up
GGGGG	
G	Sequential Production Number

Copyright © 2026, Brooks Automation

Facilities Panel

The Facilities Panel is located at the base of the robot.

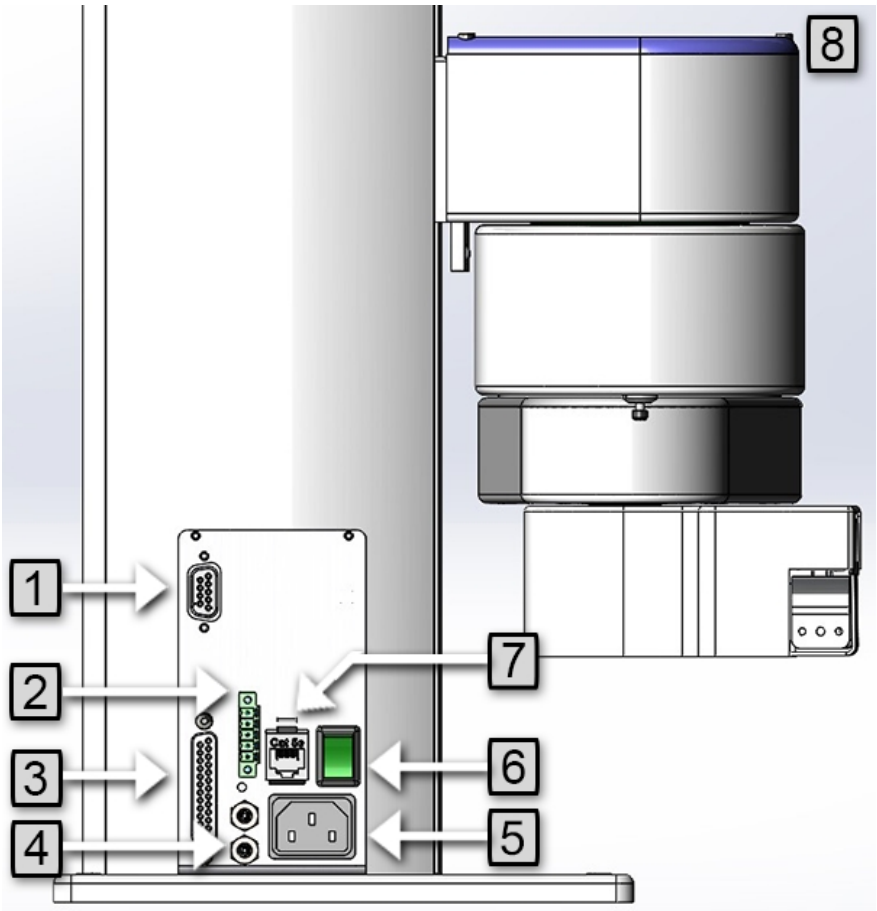

Facilities Panel key

Annotation	Name	Description
1	9 Pin 2 D Sub Connector	Contains RS-232 Serial Port, 24 VDC, Ground can be used for optional teach pendant
2	E-stop Connector	E-stop and Cell Interlock Signals.
3	25 Pin D Sub Connector	For GIO module, 8 inputs, 8 outputs
4	Pneumatic Ports	For attaching air lines for optional pneumatic gripper. See the *IntelliGuide™ Grippers* user manual.

Copyright © 2026, Brooks Automation

Annotation	Name	Description
5	Power Entry Module	For IEC plug. Contains dual fuse drawer.
6	Power Switch	Lighted Power Switch
7	Ethernet Connector	For Ethernet to Computer Cable
8	Status Light	A blinking light indicates the normal state, a solid light indicates an error, and no light indicate a possible issue with the controller.

To simplify interfacing, most of the electrical interfaces provided by the robot's embedded Guidance Controller are available on the Facilities Panel. These include:

- Digital input signals
- Digital output signals
- Ethernet port
- Remote Front Panel / MCP / E-Stop
- RS-232 serial interface

Each of these interfaces is described in detail in the following sections. In addition, the robot's controller, which is mounted in the inner link of the robot, may contain additional interfaces (e.g. inputs or outputs). Refer to the *Guidance Controllers*manual for additional information.

DANGER

High Voltage

The Guidance Controller and 24 VDC and 48 VDC power supplies are all open-frame electrical devices that contain unshielded high voltage pins, components, and surfaces. Always disconnect the main AC power before removing the Facilities Panel.

Copyright © 2026, Brooks Automation

If the pneumatic gripper option is ordered, two air lines are routed through the interior of the robot. At the Facilities Panel, these air lines are presented in a fitting on a sub plate mounted to the facilities panel. The other end of these lines exit at the Outer Link. When using these lines, clean, dry external air should be provided.

CAUTION **High Pressure Air**	
The maximum air pressure that can be conveyed by the air lines through the robot is 75 PSI. Applying a pressure exceeding this level may disconnect interior connections or damage fittings or hoses. If a higher pressure is required, utilize an external air line.	

World Coordinates, Joint Directions, and Tool Coordinates

The World Coordinate System's origin is the center of the robot base with Z Pointing up parallel with the Z Column and the X axis Pointing Forward in the same direction as the Shoulder. Note this may change when the robot is on a linear rail. See the *Linear Rail User Manual* for more information.

Copyright © 2026, Brooks Automation

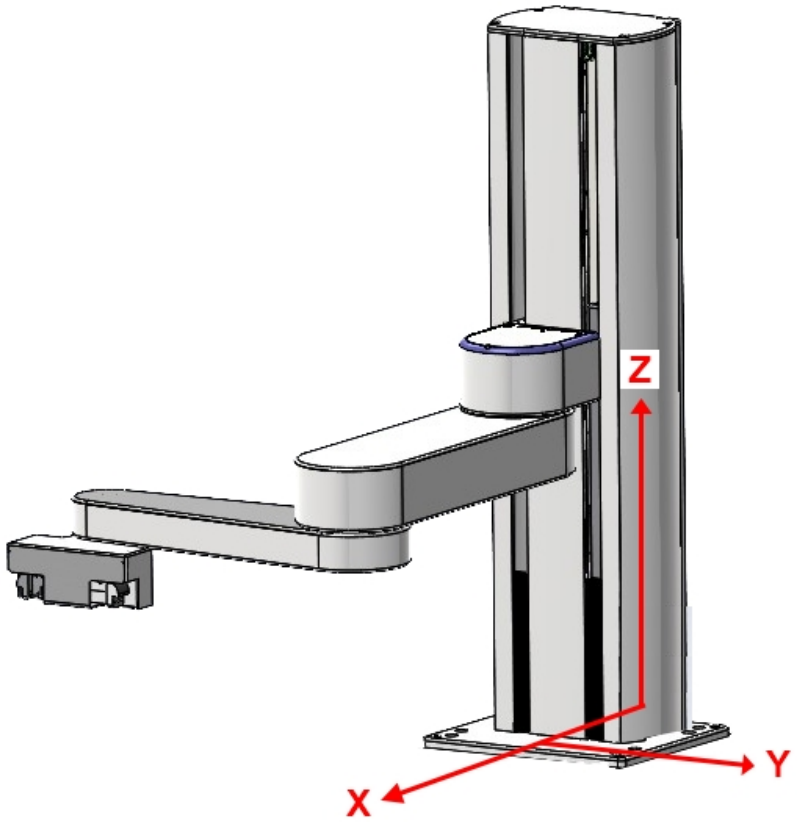

World Coordinates for X, Y, and Z Axes

The robot by default has four joints but it can be extended up to six joints via servo gripper and Linear Rail.

The first axis of the robot, J1, moves the robot arm up along the Z Column. At the robot's lowest position is zero. Positive travel moves the arm up.

The second axis of the robot, J2, pivots the remaining link about the shoulder. When the first link is pointing straight out, J2 is in it’s zero position. Looking down on the robot, counter-clockwise rotation is in Positive J2 motion.

The third axis of the robot, J3, pivots the remaining link about the elbow. When the second link is pointing straight towards the Z Column, J3 is in its zero position. Looking down on the robot, counter-clockwise rotation is in Positive J3 motion.

Copyright © 2026, Brooks Automation

The fourth axis of the robot, J4, pivots the end effector about the wrist. When the end effector is pointing straight toward the elbow, J4 is in its zero position. Looking down on the robot, counter-clockwise rotation is in positive J4 motion.

The fifth axis of the robot, J4, opens and closes the servo gripper. Positive motion opens the gripper and negative motion closes the gripper. Zero position is beyond the robot's range of motion.

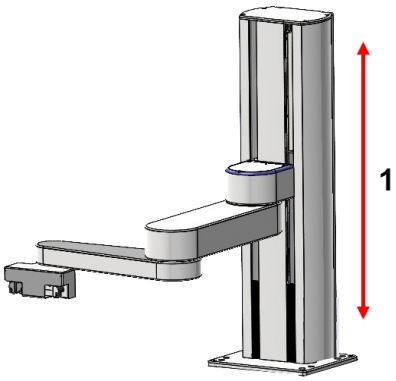

Vertical Direction for J1

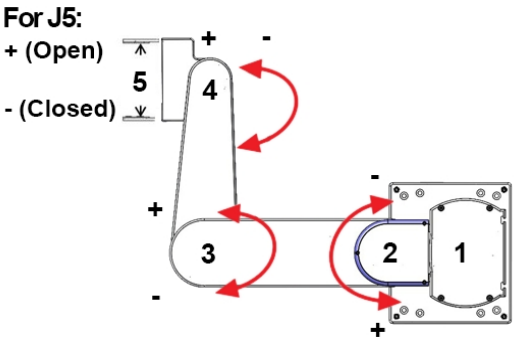

Joint Directions for J2 - J5

Number	Axis	Description of Joint Directions
1.	Z column	Joint 1 (J1). The postive (+) stroke moves up the robot column, and the negative (-) stroke moves down the robot column. The distance depends on the robot model.
2.	Shoulder	Joint 2 (J2). Rotates.
3.	Elbow	Joint 3 (J3). Rotates.

Copyright © 2026, Brooks Automation

Number	Axis	Description of Joint Directions
4.	Wrist	Joint 4 (J4). Rotates. With an ISO Tool Flange, rotation is limited to a single rotation, but with a PreciseFlex servo gripper, rotation is multi-turn. See the *IntelliGuide Grippers* user manual for more information.
5.	Gripper	Joint 5 (J5). Optional IntelliGuide Gripper. The positive (+) direction opens the gripper and the negative (-) directionn closes the gripper. See the *IntelliGuide Grippers* user manual for more information.

Joint 6 is the optional Linear Rail.

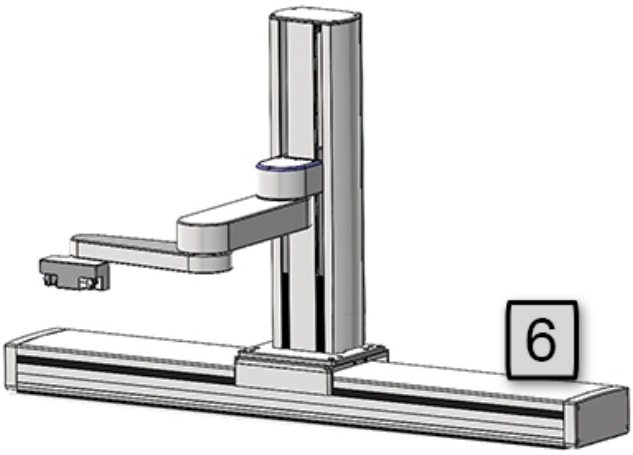

A light bar is mounted at the top of the shoulder cover (or column for some robots) and blinks at a rate of once per second to indicate that the controller is operational, and it blinks at a rate of 4 times per second when power is being supplied to the motors.

The Z axis includes a fail-safe brake. This brake must be released to move the Z axis up and down manually. There is a manual brake release button on the bottom of the inner link near the Z axis. Depressing this button when 24 VDC power is on will release the Z axis brake while the button is depressed. It is not necessary for the control system to be operating for the brake release to function; the only requirement is providing 24 VDC to the controller. Care should be

Copyright © 2026, Brooks Automation

taken to support the Z axis when the brake release button is pushed as the axis will fall due to gravity.

For the tool coordinates (see the image below), whatever direction the fingers point is the tool Z direction, while the tool X direction is pointing in the same direction as the world Z axis.

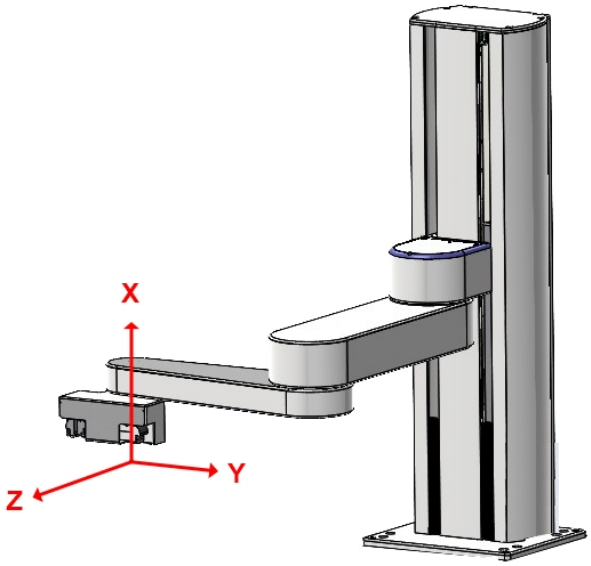

Tool Coordinates

Compatible Accessories

Compatibility	
IntelliGuide n23 Servo Gripper	X
IntelliGuide n23D Servo Gripper (Dual)	X
IntelliGuide n60 Servo Gripper	X
IntelliGuide v23 Vision Gripper	X
IntelliGuide v60 Vision Gripper	X
Linear Rail – 1 M	X
Linear Rail – 1.5 M	X
Linear Rail – 2 M	X

Copyright © 2026, Brooks Automation

Optional Linear Axis Module

The PreciseFlex 3400 robot may be attached to an optional Linear Axis Module. The Linear Axis Module may be ordered in 1000 mm, 1500 mm and 2000 mm travel distances. See the *Linear Axis User Manual* for more information.

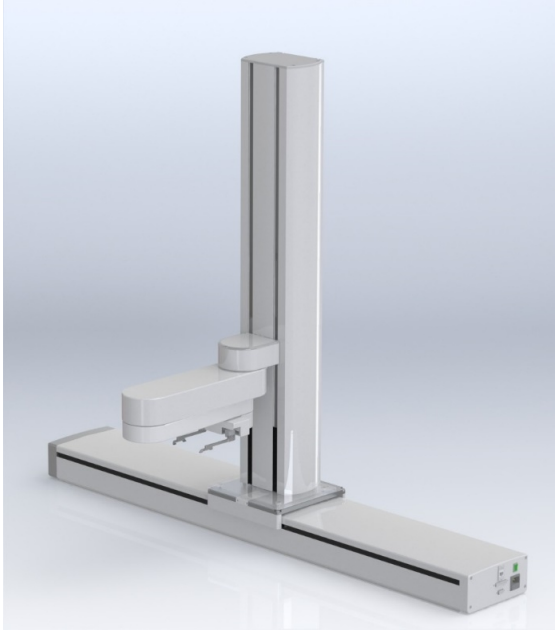

750 mm Vertical Travel PreciseFlex 3400 on a 1000 mm Linear Axis Module

IntelliGuide Servo Grippers

The PreciseFlex 3400 robot may be ordered with the IntelliGuide s23 or IntelliGuide s60 servo gripper. The IntelliGuide s23 gripper has a stroke of 60 mm and gripping force of 23 N. The gripper is ideal for labware or small parts handling. When used for handling microtiter plates, the gripper can pick the plate in portrait or landscape mode. The IntelliGuide s23D (Dual Gripper) is also available. The IntelliGuide s60 gripper has a stroke of 40 mm and gripping force of 60 N.

Copyright © 2026, Brooks Automation

IntelliGuide s23 (shown with gripper fingers)

When ordered with the robot, the gripper is installed at the factory. See the IntelliGuide Gripper User Manual for more details.

IntelliGuide Vision Grippers

The PreciseFlex 3400 robot may also be ordered with the IntelliGuide v23 or IntelliGuide v60 vision gripper. These grippers have similar gripping specifications to the IntelliGuide s23 and IntelliGuide s60 grippers. In addition, they have two 5MP cameras and an IPC embedded in the gripper.

Copyright © 2026, Brooks Automation

IntelliGuide v23 (shown with gripper fingers)

When ordered with the robot, the gripper is installed – and the cameras are calibrated – at the factory. See the IntelliGuide Gripper User Manual for more details.

Copyright © 2026, Brooks Automation

3. Installation Information

Setup and Operation

a. Unpack the PreciseFlex robot.
b. Mount the robot.
c. Add or remove a gripper (optional). See the *PreciseFlex Gripper* user manual.
d. Connect the power.
e. Connect the PreciseFlex robot to a PC or tablet, and open the interface.
f. Run the robot. See "Accessing the Web Server".

Unpacking and Handling Instructions

PreciseFlex robots are shipped in wooden crates with international ratings and foam inserts to protect the robots. As the robots weigh 25 kg or more, two persons should move the robot to the installation location.

Mounting Instructions

PreciseFlex robots must be attached to a rigid surface that can withstand lateral forces of 200 Newtons without moving or vibrating. The robot base has an integrated bolting pattern to accommodate (4) M6 socket head cap screw (SHCS) mounting screws located as shown below.

Copyright © 2026, Brooks Automation

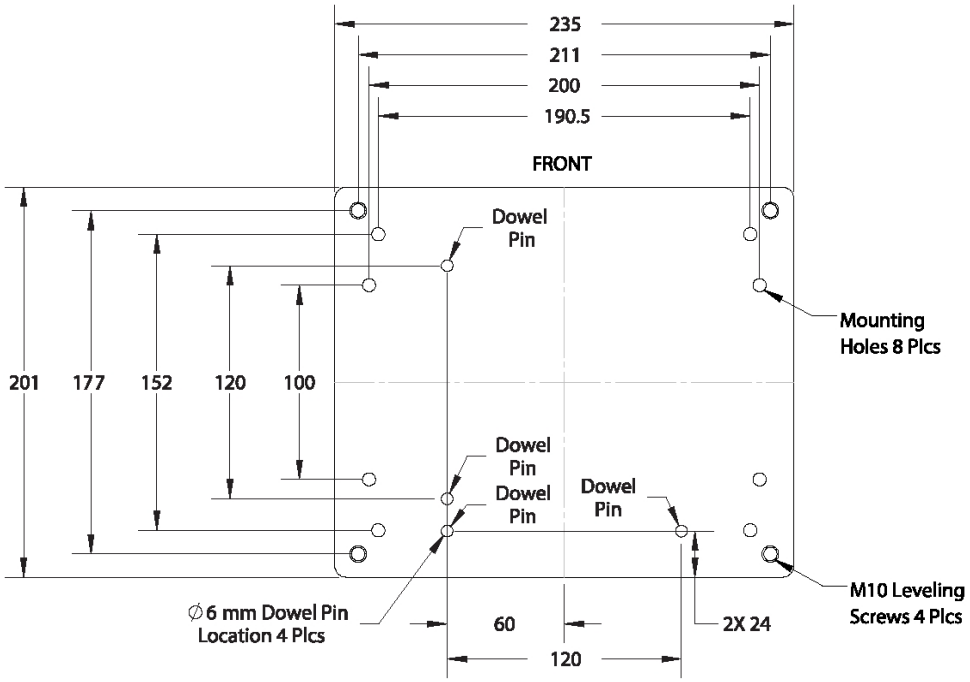

Copyright © 2026, Brooks Automation

Work Envelope

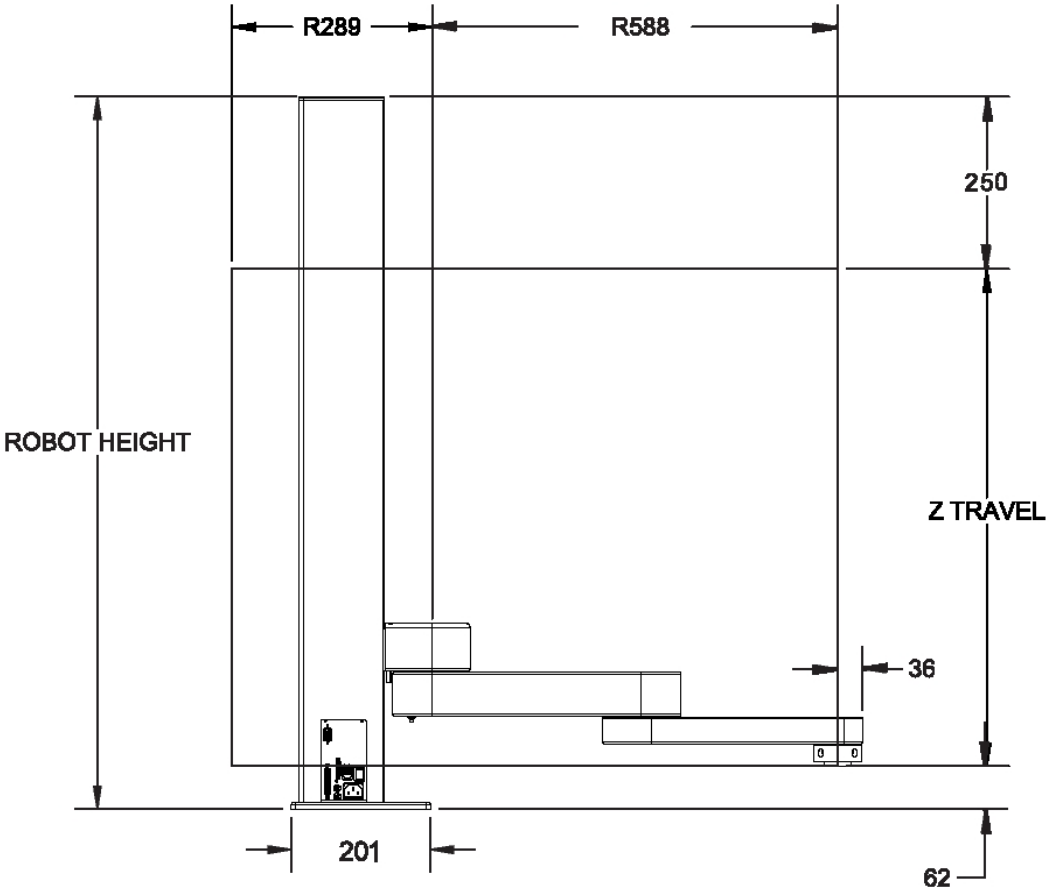

Robot Height	Z Travel
712 mm	400 mm
1062 mm	750 mm
1472 mm	1160 mm

Copyright © 2026, Brooks Automation

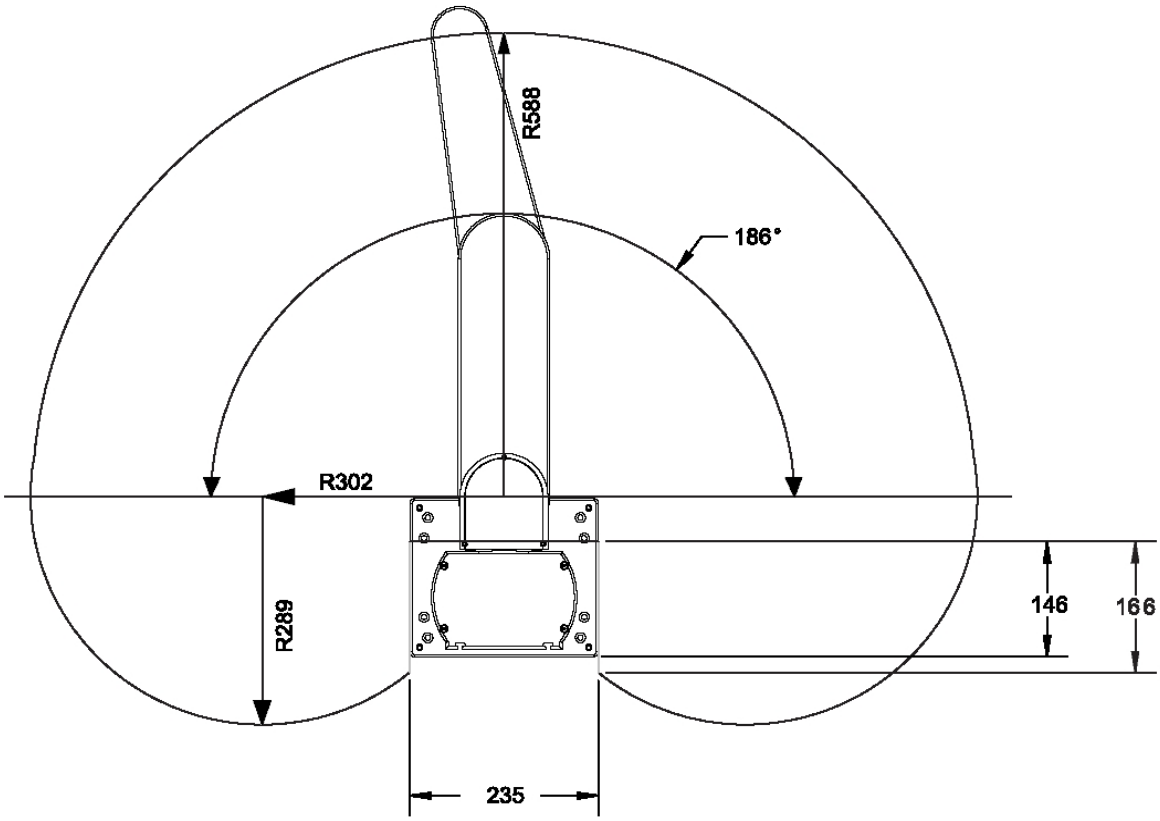

Tool Mounting

The outer link has a flange for users to attach grippers or tooling. PreciseFlex robots typically comes with two pneumatic lines installed, but it may be ordered with optional electric grippers

To facilitate electrical interfacing to user tooling, digital I/O signals are available in the outer link. For robots with an electric gripper, the electric gripper controller in the outer link has two extra inputs and two extra outputs available for users. However, it should be noted that all the wires in the 18 conductor slip ring are consumed by the electric gripper, so any additional IO wiring will have to be routed outside the robot wrist. For robots without the electric gripper, a ribbon cable from the Guidance Controller is routed to the outer link. This ribbon cable provides four digital inputs and four digital outputs from the controller. See the *IntelliGuide Grippers* user manual.

For robots where support for a pneumatic gripper or pneumatic tooling has been ordered, one or two 1/8" OD air hoses are routed from the connector plate in the base through the robot and out

Copyright © 2026, Brooks Automation

to the outer link. These air hoses can be connected to one or two solenoids mounted in the outer link for tooling control.

ISO Flange for End-of-Arm Tooling

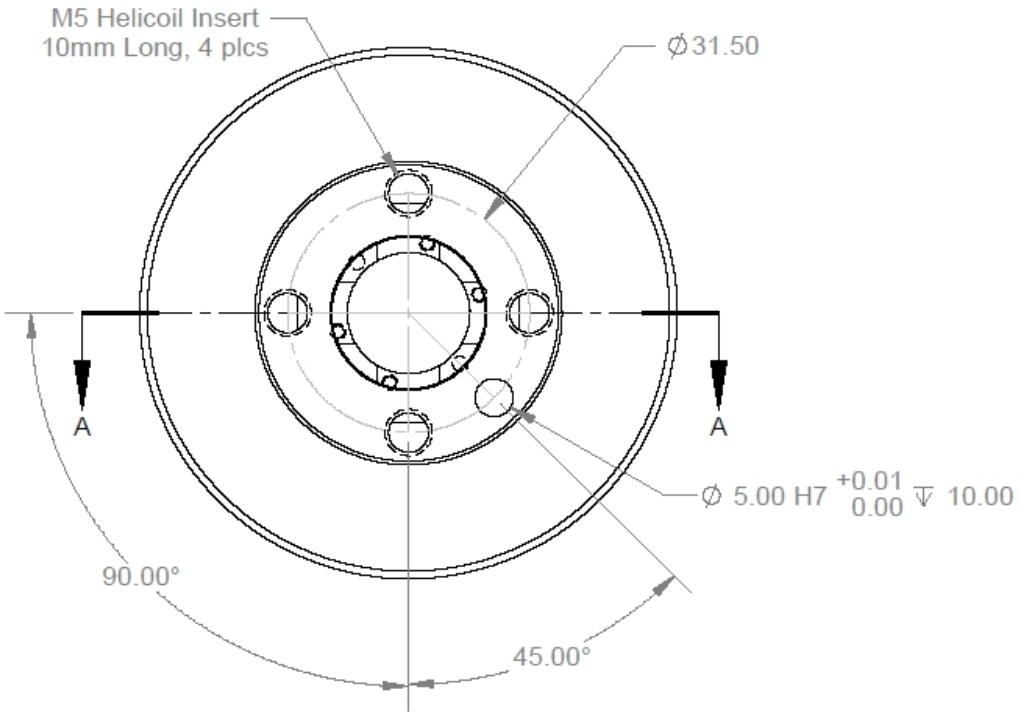

ISO Flange, ISO-9409-1-31.5-4-M5, Installation PreciseFlex 3400 - ISO Bolt Pattern View

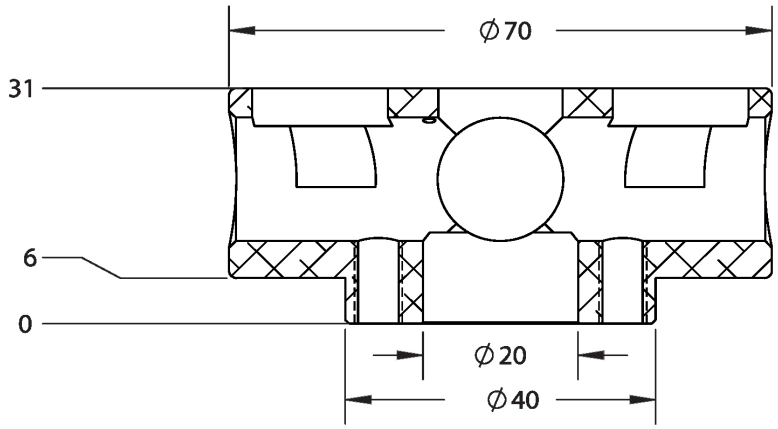

ISO Flange, ISO-9409-1-31.5-4-M5, Installation PreciseFlex 3400 - Cross-Section View

Copyright © 2026, Brooks Automation

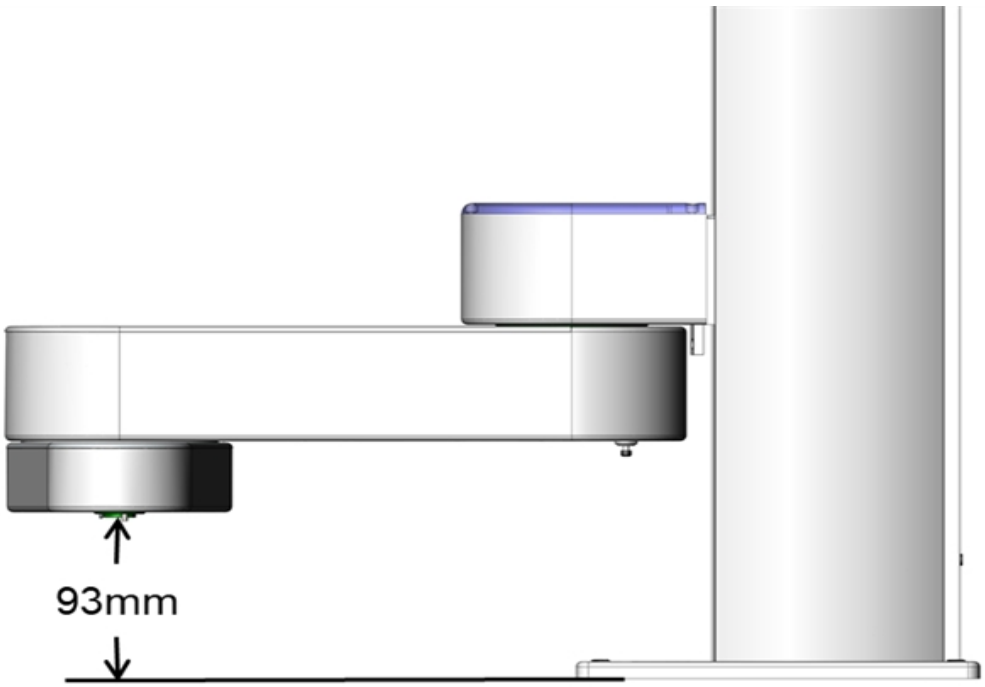

Gripper Flange Mount Height from PreciseFlex 3400

Power Requirements

PreciseFlex robot power supplies have an input range of 100 to 240 VAC, +/- 10%, 50/60 Hz. The robots are equipped with an IEC electrical socket that accepts country specific electrical cords. Power requirements vary with the robot duty cycle, but do not exceed 200 Watts RMS.

Accessing the Robot Controller

Although most of the controller interface signals are exposed on the "Facilities Panel" at the base, there are times when it may be necessary to access either the robot's controller or its power supplies. To access the robot controller, the cover on the inner link must be removed by removing (4) M3 X 20 SHCS from the bottom of the inner link

See the *Guidance Controller* user manual, document #613246, for detailed information on hardware configuration and interfacing the controller using the various input and output ports

Copyright © 2026, Brooks Automation

such as those for digital I/O. Also, refer to the *Guidance System Setup and Operation Quick Start Guide* for information on configuring the PC and instructions on operating the robot. Both manuals are available in PDF format and are also contained in the *PreciseFlex Library*.

Environmental Specifications

PreciseFlex robots must be installed in a clean, non-condensing environment. Light fluid splashing around the base of the robot is acceptable, but this robot is not intended for use in a washdown or spray environment. See the Appendix Environmental Specifications for specific environmental limits.

Emergency Stop

It is necessary to wire an Emergency Stop Button to the controller. This button may be wired in series with other emergency stop contacts. The E-stop signals are available in the green Phoenix E-stop connector and the Manual Control Pendant 9-pin DSub connector that is mounted on the Facilities Panel. See Hardware Reference for detailed information on the E-stop signals.

Copyright © 2026, Brooks Automation

4. Hardware Reference

E-stop Connector

The standard E-stop connector is the green Phoenix connector on the "Facilities Panel". Note the E-stop pins on the MCP Interface are in series with the E-stop signals on the Phoenix E-stop connector.

An E-stop box or circuit can be plugged into either one of these two connectors. However, for the robot to allow motor power to be enabled the E-stop circuit must connect 24 VDC to E-stop1 in both of these two connectors.

If no E-stop box or circuit is connected, then the circuit must be completed with a jumper from pin 1 to pin 2 on the E-stop Connector and from pin 1 to pin 6 on the MCP Connector.

The robot is shipped with a jumper plug installed in both the E-stop Connector and MCP Connector that satisfy these requirements.

Unlike the Digital IO circuits, the E-stop circuit cannot be configured as "Sourcing" or "Sinking." If a remote signal (for example from a PLC) is used to trigger E-stop, it should be wired to a relay that closes the circuit between pins 1 and 2. When the robot is mounted on a Linear Axis, the MCP Interface is extended to the end cap of the Linear Axis.

Copyright © 2026, Brooks Automation

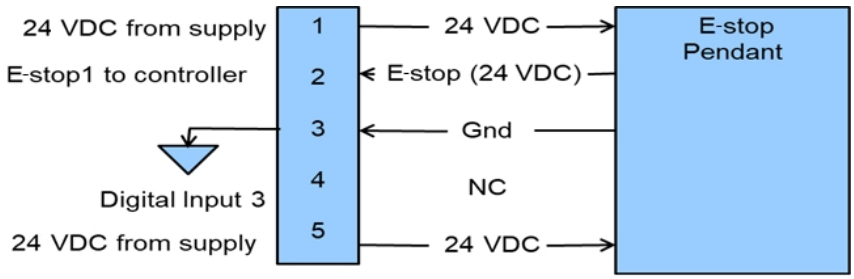

E-stop Pins on the E-stop Connector Interface

MCP Interface

The MCP interface includes the signals necessary to connect a Manual Control Pendant, secondary E-stop circuit, or an external RS-485 Remote IO Module. These signals are provided in a DB9 female connector mounted on the robot's "Facilities Panel" and on the end cap of the optional Linear Axis.

> ***NOTE:*** The E-Stop pins on the MCP Interface are in series with the E-stop signals on the Phoenix E-stop connector.

An E-stop box or circuit can be plugged into either one of these two connectors. However, in order for the robot to allow motor power to be enabled, the E-stop circuit must connect 24 VDC to E-Stop1 in one of these two connectors. If no E-stop box or circuit is connected, both circuits must be completed with jumper plugs. (The robot is shipped with a Phoenix jumper plug (PN 1851070) and a Dsub jumper plug that satisfy these requirements.)

If a Manual Control Pendant is not connected to the secondary RS-232 port provided in this connector, this serial interface can be accessed via a GPL procedure as device "/dev/com2" for general communications purposes.

> ***NOTE:*** Unlike the primary serial interface, this secondary serial interface does not support flow control. The RS-485 port is used internally to communicate with the

Copyright © 2026, Brooks Automation

gripper controller (See the *IntelliGuide Grippers* user manual) and is also be used for the Remote IO option. As such it has a dedicated protocol and is not available for general use.

Pins, Connector, and Plug

Pin	Description
1	24 VDC
2	RS-232 TXD
3	RS-232 RXD
4	RS-485-
5	Gnd
6	E-stop1
7	E-stop Daisy Chain
8	48 VDC
9	RS-485+
Interface Panel Connector Part No	DB9 Female Connector AMP 5747150-7
User Plug Part No	DB9 Male Plug Amp 1658655-1 (crimp) Pins 22-26AWG 745254-6

Digital Input and Output Signals

Digital Input Signals

The standard PreciseFlex 3400 robot provides one general-purpose optically isolated digital input signal at the "Facilities Panel" (in addition to those signals that are available at the base of the robot and at the GSB controller). This line is accessed in the Phoenix 5-pin E-Stop connector and is connected to Digital Input 3 in the controller.

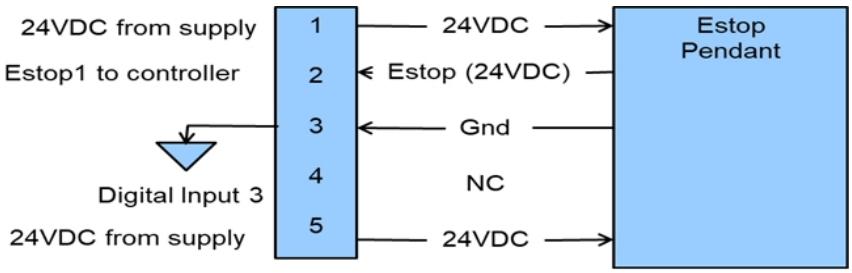

E-Stop Pins on the MCP Interface

Copyright © 2026, Brooks Automation

This input signal can be configured as "sinking" or "sourcing." If an input signal is configured as "sinking," the external equipment must pull its input high to 5 VDC to 24 VDC to indicate a logical high value or must allow it to float to no voltage for a logical low. This input is configured at the factory as “sinking.”

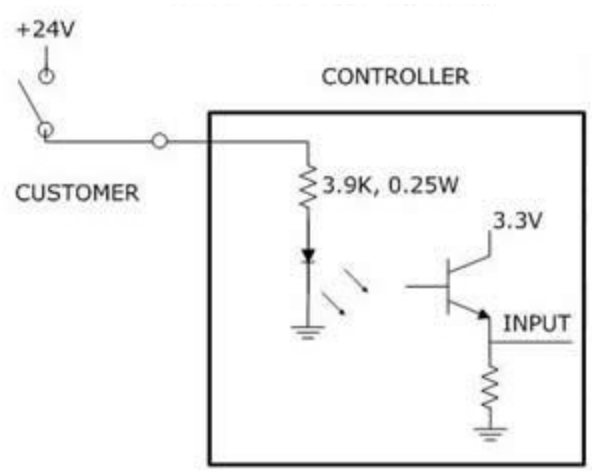

Sinking Digital Input

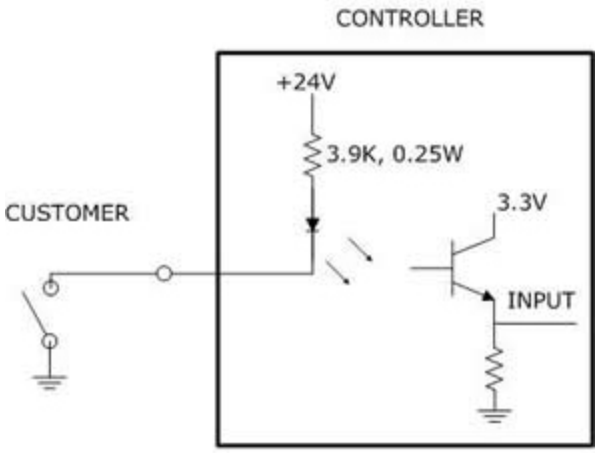

Sourcing Digital Input

By setting Jumpers on the CPU (MIDS4) board, the four output signals can be individually configured as "sinking" or "sourcing" and the four digital inputs can be configured as a group to all operate as either sinking or sourcing. For more information on configuring the jumpers, see the *Guidance Controllers*manual.

Copyright © 2026, Brooks Automation

Digital Output Signals

The PreciseFlex robot provides four general-purpose optically isolated digital output signals at the Guidance Controller. These output signals can be configured as "sinking" or "sourcing." As shipped from the factory, the output signals are configured as "sinking," i.e. the external equipment must provide a 5 VDC to 24 VDC pull up voltage on an output pin and the controller pulls this pin to ground when the signal is asserted as true.

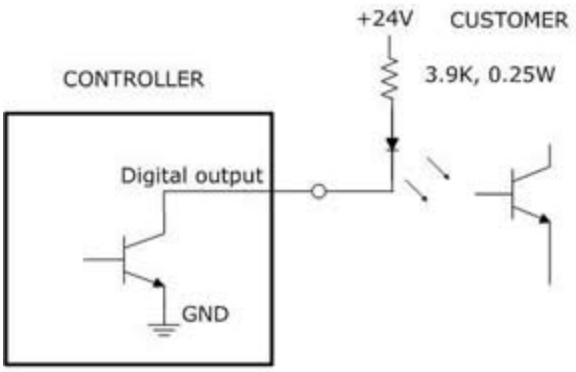

Sinking Digital Output

Alternately, the output signals can be configured as "sourcing," i.e. the external equipment must pull down an output pin to ground, and the controller pulls this pin to 24 VDC when the signal is asserted as true.

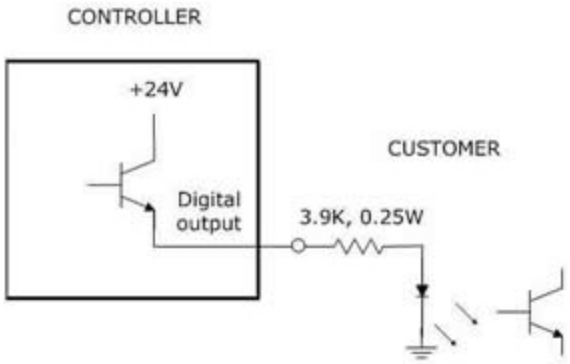

Sourcing Digital Output

Outputs can be individually configured as sinking or sourcing signals.

Copyright © 2026, Brooks Automation

The pin outs for the Guidance Controller Digital Input and Output Connector and the corresponding GPL signal numbers are described in the table below. For the user plug part, use AMP 1658622-1 or Molex 22-55-2101 or 90142-0010. For the Molex plug, use Molex sockets 16-02-0103 or 90119-2110 and Molex crimp tool 63811-1000.

Pin	GPL Signal Number	Description
1	13	Digital Output 1
2	14	Digital Output 2
3	15	Digital Output 3
4	16	Digital Output 4
5		GND
6		24VDC output
7	10001	Digital Input 1
8	10002	Digital Input 2
9	10003	Digital Input 3
10	10004	Digital Input 4

IO in Base of Robot (GIO)

The GIO function is integrated as a standard feature in the base of the robot. There are eight digital inputs. All outputs are sourcing and cannot be changed. Inputs are set to sinking in the factory and can be changed in blocks of four by moving J12 and J13 to connect pins 1 and 2, instead of 2 and 3.

For the Interface Panel Connector, use a DB25 Female Connector. For the User Plug, use a DB25 male plug.

Copyright © 2026, Brooks Automation

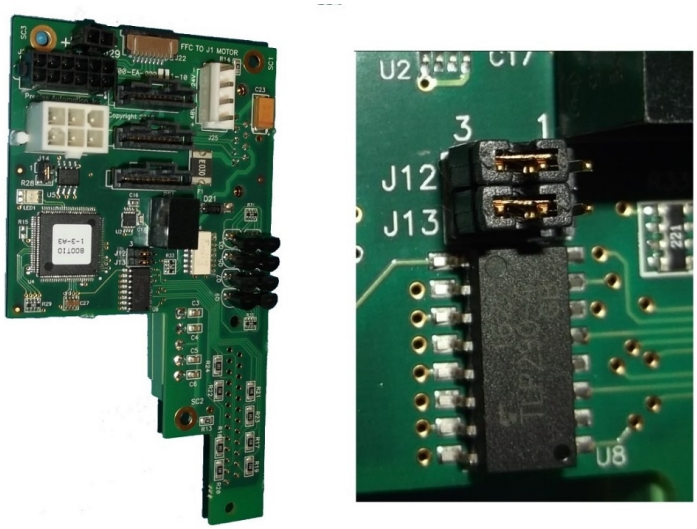

Board with J12 & J13

The software addresses will then be as follows.

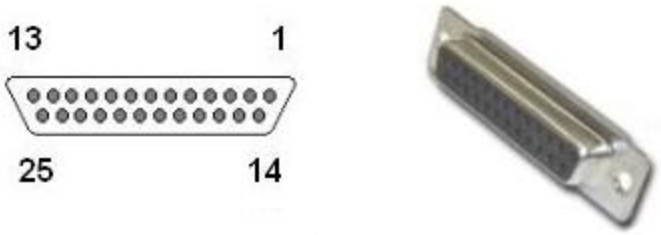

DB25 Female

Pin Out & GPL Numbers

Pin	GPL Signal Number	Description
1		Gnd
2	810001	Digital Input 1
3	810003	Digital Input 3
4	810005	Digital Input 5
5	810007	Digital Input 7
6		Not used
7		Not used

Copyright © 2026, Brooks Automation

Pin	GPL Signal Number	Description
8		24 VDC
9	800013	Digital Output 1
10	800015	Digital Output 3
11	800017	Digital Output 5
12	800019	Digital Output 7
13		24 VDC
14		Gnd
15	810002	Digital Input 2
16	810004	Digital Input 4
17	810006	Digital Input 6
18	810008	Digital Input 8
19		Not used
20		Not used
21		24 VDC
22	800014	Digital Output 2
23	800016	Digital Output 4
24	800018	Digital Output 6
25	800020	Digital Output 8

Ethernet Interface

PreciseFlex robots include an Ethernet switch that implements two 10/100 Mbit Ethernet ports. This capability was designed to permit the controller to be interfaced to multiple Ethernet devices such as other PreciseFlex controllers or robots, remote I/O units and Ethernet cameras. The Ethernet switch automatically detects the sense of each connection, so either straight-through or cross-over cables can be used to connect the controller to any other Ethernet device.

Due to limited space on the Facilities Panel, only one of the two Ethernet ports is available via an external RJ45 connector. This external Ethernet port is typically used to interface the robot to a PC. The second Ethernet port is only available inside the inner link of the robot. In some cases it may be used to connect an Ethernet camera that is mounted on the robot. In this case, a PC that is connected to the Ethernet plug on the Facilities Panel can communicate with the robot's controller as well as receive images from an arm-mounted camera. (For the initial release of this

Copyright © 2026, Brooks Automation

robot, arm mounted cameras are not supported.) If a camera is mounted in the workcell, an external Ethernet switch must be added to connect these cameras and the robot to a PC.

See the *Setup and Operation Quick Start Guide* for instructions on setting the IP address for the controller.

RS-232 Serial Interface

The PreciseFlex robot includes a standard RS-232 serial line equipped with hardware or software flow control. However this port is only available on the Guidance Controller in the inner link of the robot and is not brought out to any outside connector on this robot. This port can be used to communicate to the system serial console or can be connected to external equipment for general communication purposes. When used for general communications, this port is referenced as device "/dev/com1" within the Guidance Programming Language (GPL).

The connector for this interface is a standard RJ11 serial interface connector that has pin assignments compatible with standard PC "com" ports. For this robot it is only used for debugging and special service procedures.

Copyright © 2026, Brooks Automation

RS-485 Network Termination with Linear Rails

The PreciseFlex 3400 robot uses an internal RS-485 network to communicate between the main robot controller (located in the inner link assembly) and the GSB servo boards. To maintain signal integrity and improve noise immunity, termination resistors are installed at the ends of the RS-485 network. This termination is enabled by a jumper installed on J6 of the main robot controller.

When the PreciseFlex 3400 robot is installed on a linear rail, the RS-485 network is extended to the GSB inside the linear rail. It is then necessary to remove the J6 jumper, which deactivates the termination resistors on the main controller. Linear rails are preconfigured with the necessary termination resistors in place.

To remove the J6 jumper on the PreciseFlex 3400 robot, follow the procedure below.

DANGER **Electrical Shock**	
Turn off the AC power before replacing the robot controller.	

Tools Required

- 2 mm hex driver or hex L wrench
- Needle nose pliers

Spare Parts Required

- None

Copyright © 2026, Brooks Automation

Step	Action
1.	Turn off the robot power and remove the AC power cord. 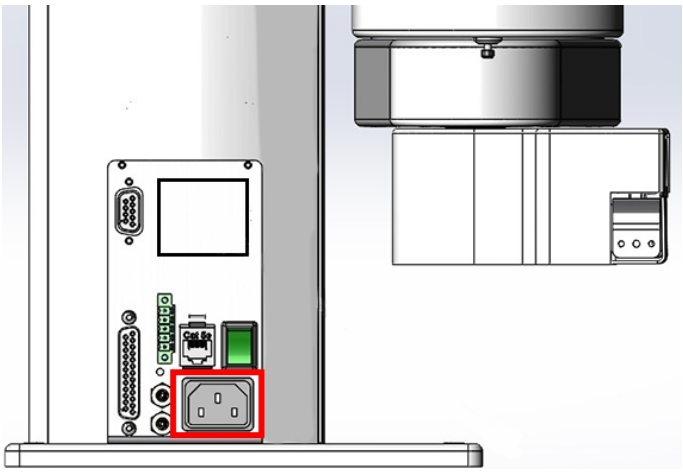
2.	To access the inner link, remove the (4) M3 × 20 mm SHCS and lock washers from the bottom of the link. Once the fasteners have been removed, lift off the top cover. 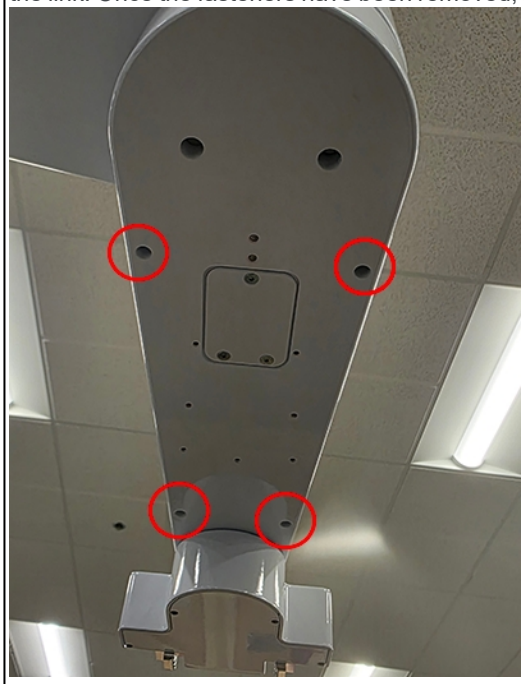

Copyright © 2026, Brooks Automation

Step	Action
3.	Move the J6 jumper over one position so that the termination resistors are not connected. By moving the jumper over one position, the jumper is still available if the robot is later removed from the linear rail. 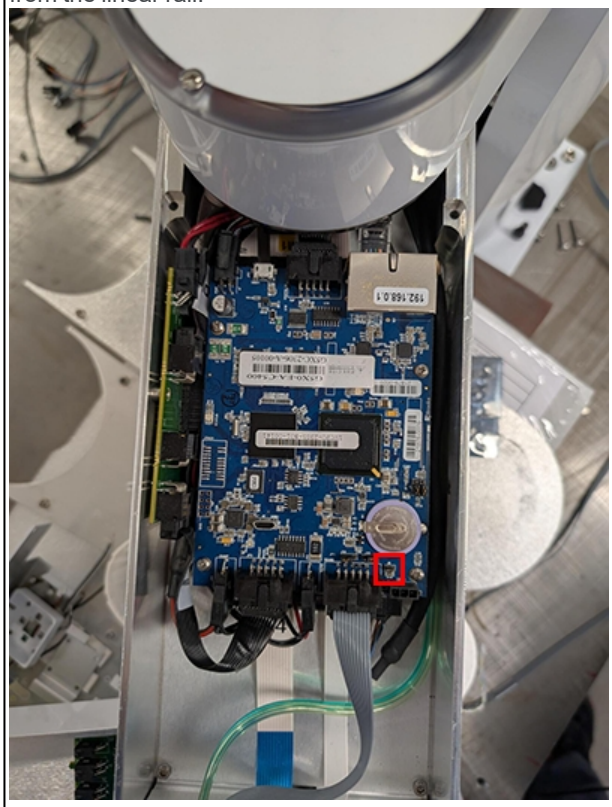
4.	Return the link cover to its original position and ensure it is secure. ***NOTE:*** *Do not overtighten the inner or outer link cover screws. Excessive torque can pull the press-fit PEM nuts out of the sheet metal, potentially requiring cover replacement.*

Copyright © 2026, Brooks Automation

5. Software Reference

Accessing the Web Server

Many OEM customers run the PreciseFlex 3400 using a PC to provide an application-specific operator interface. In order to update software in the controller, and view certain error messages, it is necessary to access the Web Server Interface embedded in the controller.

Step	Action
1.	Open a browser in a PC that is connected to the robot via Ethernet. The user must know the IP address of the robot controller. Two common IP addresses are 192.168.0.1 and 192.168.0.10. The PC LAN interface address must be configured correctly (for example 192.168.0.100, with subnet mask 255.255.255.0). 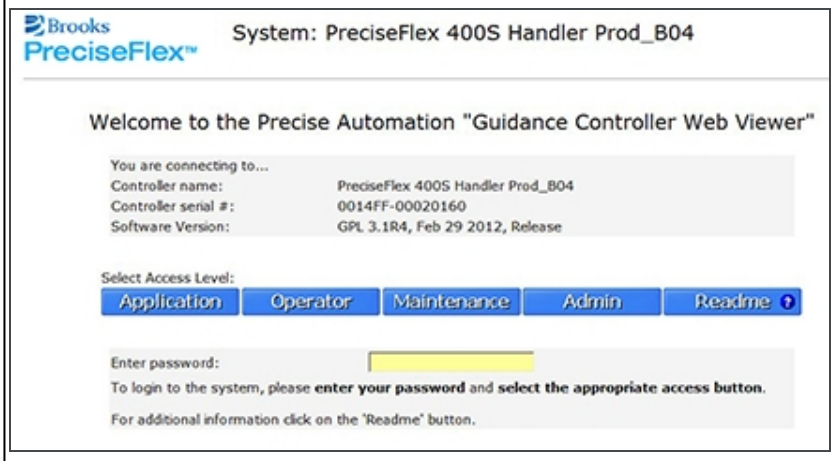

Copyright © 2026, Brooks Automation

Step	Action
2.	It may be necessary to enter a password if a company has protected access to the web Interface. Once the password has been entered, click **Admin** to access all the features to perform system upgrades. 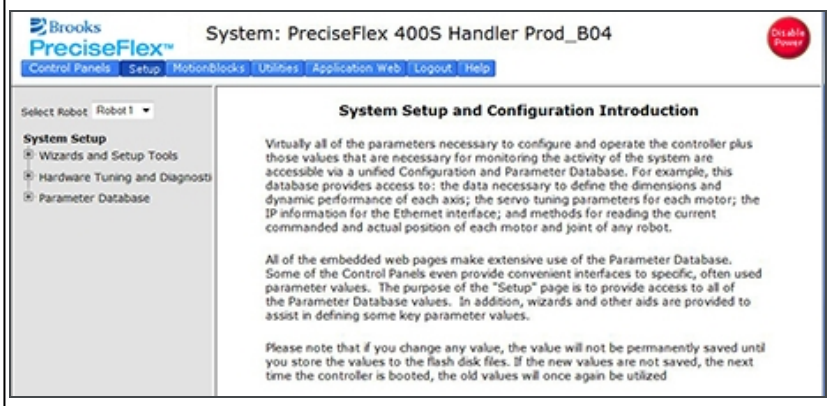
3.	Click **Control Panels** > **Operator Control Panel**. 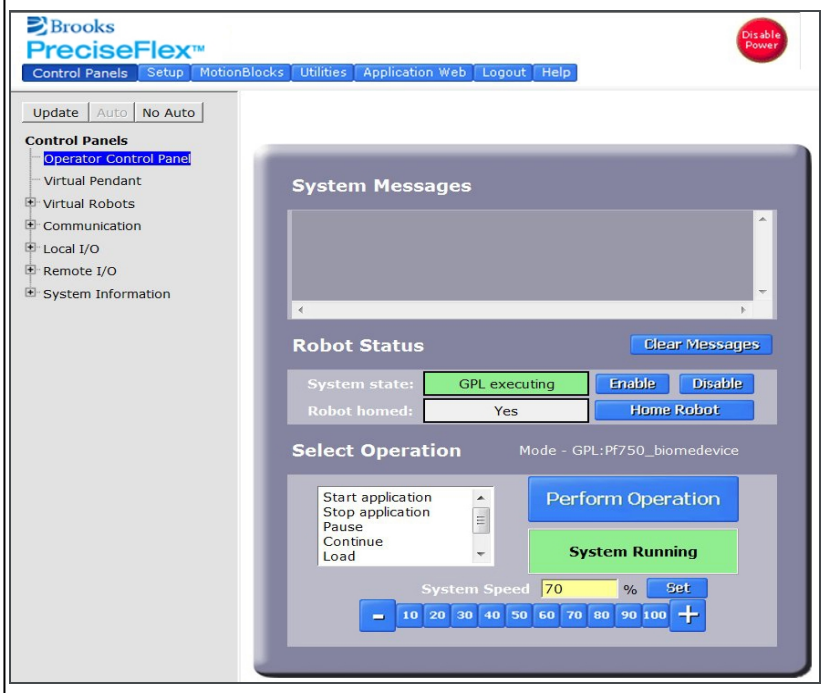
4.	If an application is running, the “System Running” panel will display in green. In order to run diagnostics, stop the application from running. Click **Stop Application** and then **Perform Operation**. This will stop the application from running.
5.	Click **Disable Power** to be sure motor power is off.

Copyright © 2026, Brooks Automation

Step	Action
6.	To load a new project (for example CAL_PP), click **Unload** and then **Perform Operation** before loading the new project into RAM.

Loading a Project (Program) or Updating PAC Files

If CAL_PP or a different program needs to be loaded into the controller from an external computer, this may be done using the Web Interface.

Step	Action
1.	In the Operator Interface, select **Utilities > System Utilities > Backup and Restore**. 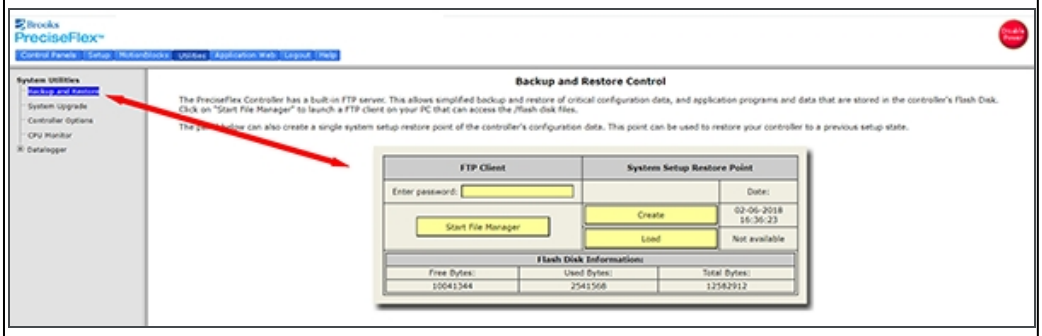
2.	Click **Start File Manager**to connect to an FTP utility. 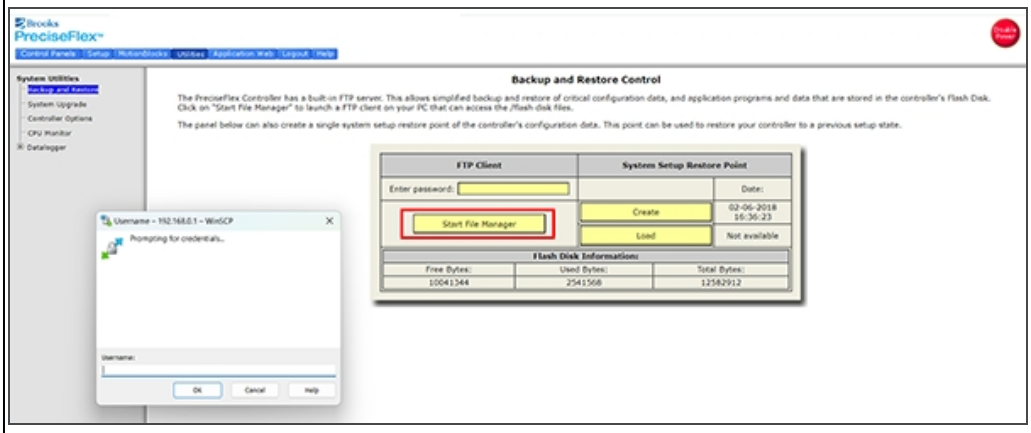

Copyright © 2026, Brooks Automation

Step	Action
3.	To load a project, open the “Projects” folder and paste the Project folder into this area. There may be several other projects (programs) loaded into this folder, which is stored in flash ram in the controller. A project folder is a software folder than may have several files inside it. Load the entire folder, not just the files inside. 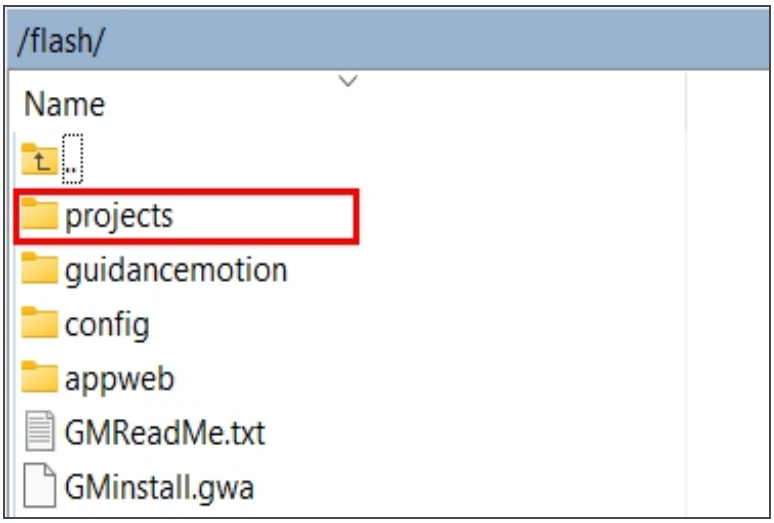
4.	To load or update PAC files, open the “Config” folder and paste a backup copy of the PAC files into the “Config” folder. These files will all have a .pac extension. The robot must be re-booted after new PAC files are installed for them to take effect. 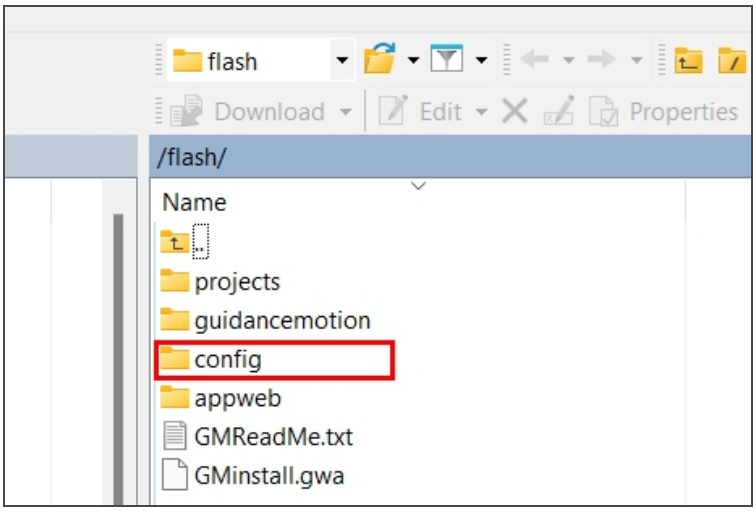
5.	Once the appropriate project (for example CAL_PP) has been loaded into flash memory, it must then be loaded into dynamic memory in order to execute. See ""Calibrating the Robot: Setting the Encoder Zero Positions"" for an example on how to load and execute the CAL_PP program.

Copyright © 2026, Brooks Automation

Calibrating the Robot: Setting the Encoder Zero Positions

Cal_PP is a service program that must be run to set the zero positions of the absolute encoders on each motor. The zero positions must be re-established if any of the motors are replaced, their cables disconnected for a long duration, or the encoder backup battery has been disconnected.

To run Cal_PP, the controller must be configured to run GPL programs and Cal_PP must be loaded into the controller's memory. See the Appendix for "Preventative Maintenance."

Tools Required:

- 2.5 mm and 3.0 mm hex drivers or hex L wrenches
- Set of (3) Calibration Dowel Pins, located in plastic bag inside the hollow slot in the front cover

The following procedure describes the steps for defining the zero positions of the PreciseFlex 3400 robot axes using Cal_PP.

Step	Action
1.	Enable power to the robot’s controller, but do not turn on power to the motors. (This procedure should be executed with the motor power off. The robot does not move).

Copyright © 2026, Brooks Automation

Step	Action
2.	The CALPP program is typically installed at the factory and should be loaded into flash memory. Using the browser-based Operator Control Panel, first unload any currently loaded programs. Select the **UnLoad** item in the left scrolling window and click **Perform Operation**. This ensures that no GPL project is currently selected for execution. 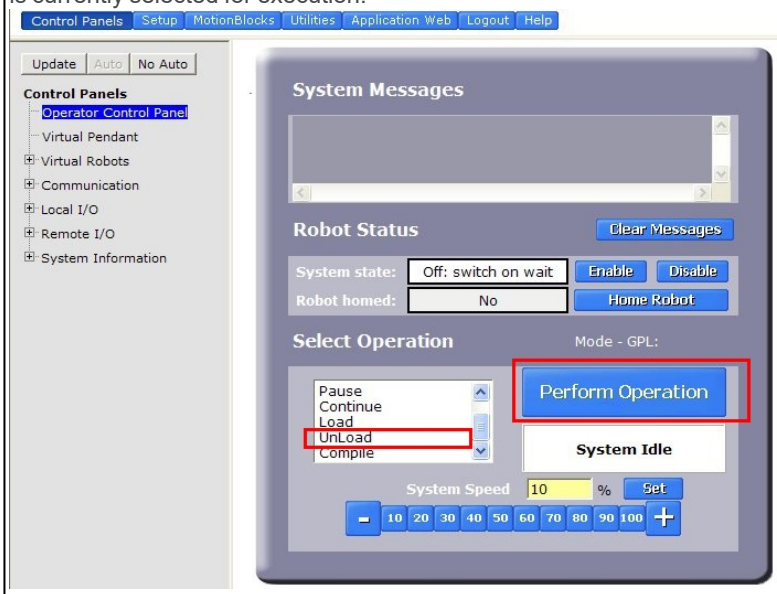
3.	Select the **Load** item and click **Perform Operation**. This displays a pop-up list of Projects that are in the flash disk and available for execution. 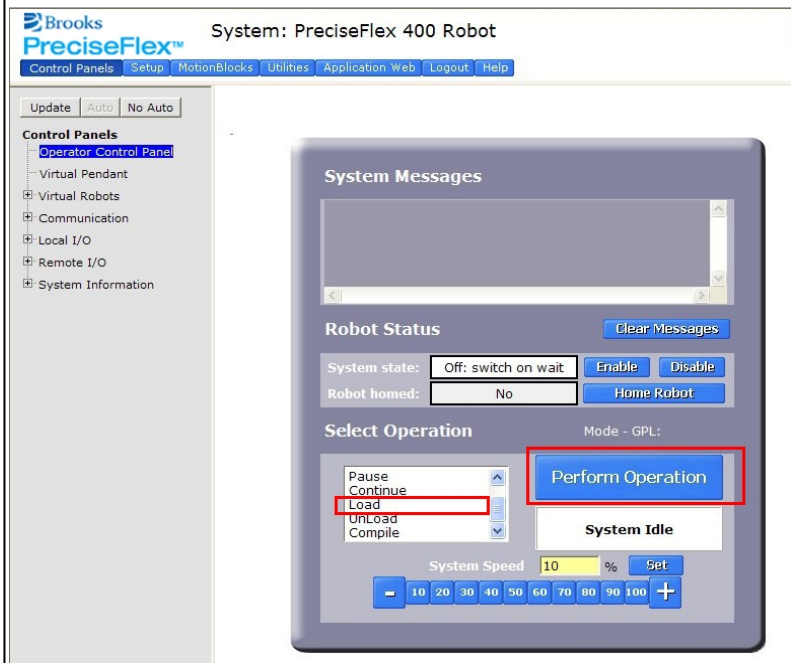

Step	Action
4.	In the window, click **CALPP_RevXX** and click **Select**. To execute the Project, select **Start application** and click **Perform Operation**. If CALPP is not loaded in the robot, first Load Cal_PP into the controller's memory from a PC, using the web Operator Control Panel, as described in Software Reference.
5.	Manually move the robot into the configuration shown in Step 10. The top cover of the outer link will need to be removed by removing the (4) M3 X 20 SHCS that are located in counter bores under the outer link. ***NOTE:*** *If the optional Linear Axis is installed, move the Linear Axis carriage to the hard stop near the connector end cap. For the Linear Axis calibration, be sure to use CALPP Revision 21 or later.*
6.	Ensure that the Z-axis is resting on the lower hard stop by releasing the Z-axis brake by pushing on the brake release button under the shoulder while supporting the robot arm, and lowering the robot arm gently until it rests on the lower hard stop.
7.	If the Calibration Pins have not already been removed from the robot, it may be necessary to remove the top cover of the robot by removing the (4) M5 Low Head screws with a 3.0 mm hex driver and then removing the front cover to access the bag with the Calibration Pins which are inside the front cover extrusion at the bottom.
8.	Insert an M3 X 30 mm Calibration Dowel Pin into the J4 (wrist) pulley with the gripper positioned under the outer link and rotate the gripper back and forth until the pin drops into a slot in the outer link, locating the gripper under the center of the outer link. See the *IntelliGuide Grippers* user manual.
9.	Insert a tapered 0.5 in Calibration Dowel Pin into the hole in the bottom of the shoulder. Rotate the inner link counter-clockwise until it rests against this pin as shown in Step 10.

Copyright © 2026, Brooks Automation

Step	Action
10.	Insert an tapered 0.5 in Calibration Dowel Pin into the hole on inner link as shown below. Rotate outer link clockwise until it rests against the dowel pin. If the robot is installed on a linear rail, push the rail carriage all the way to the hard stop at the linear rail connector end cap. 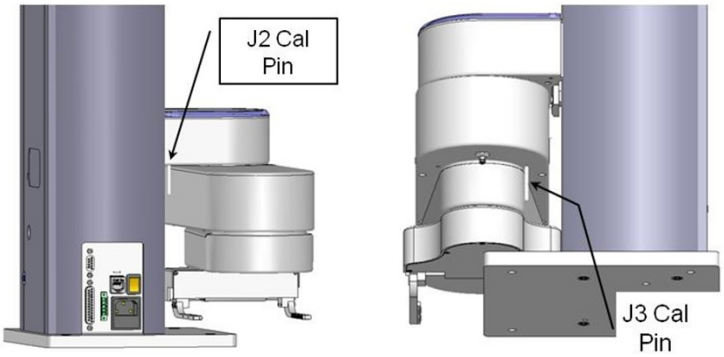 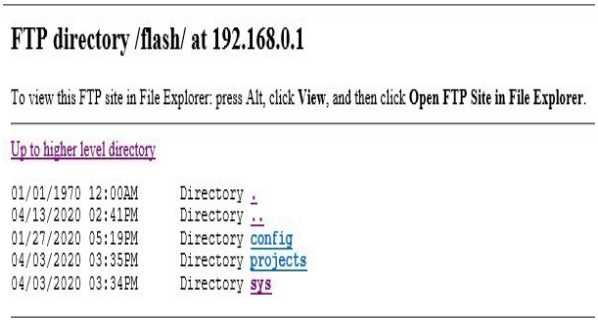 FTP directory /flash/ at 192.168.0.1 To view this FTP site in File Explorer: press Alt, click **View**, and then click **Open FTP Site in File Explorer**. Up to higher level directory 01/01/1970 12:00AM Directory . 04/13/2020 02:41PM Directory .. 01/27/2020 05:19PM Directory config 04/03/2020 03:35PM Directory projects 04/03/2020 03:34PM Directory sys
11.	For the Dual Gripper, J6 will be in the outwards orientation in the CALPP position. See the *IntelliGuide Grippers* user manual. 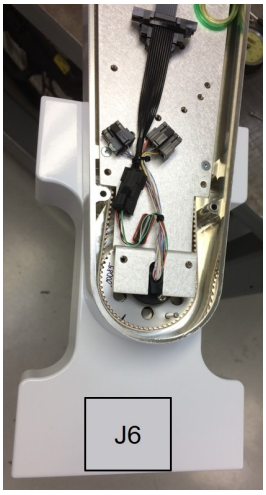

Copyright © 2026, Brooks Automation

Step	Action
12.	With the CALPP application loaded, select **Start Application** and then click **Perform Operation**. The application should start and prompt the user to confirm the correct robot position for calibration. 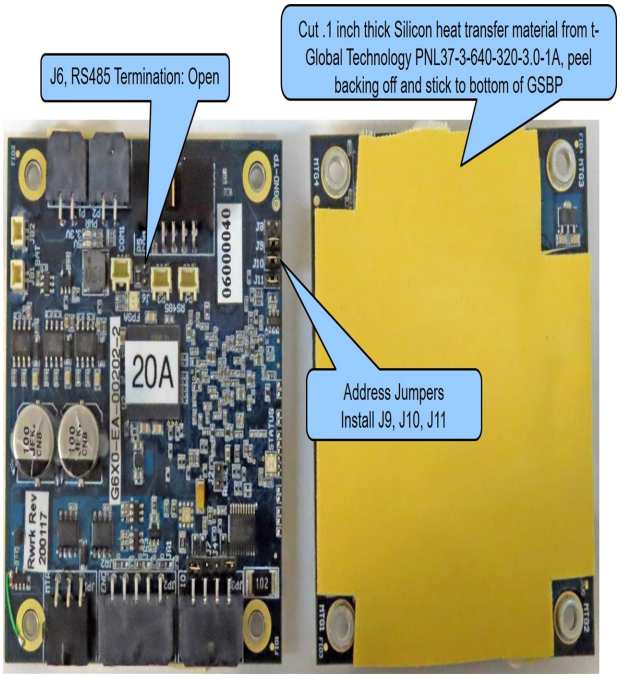
13.	The CALPP application takes about 1 minute to run. 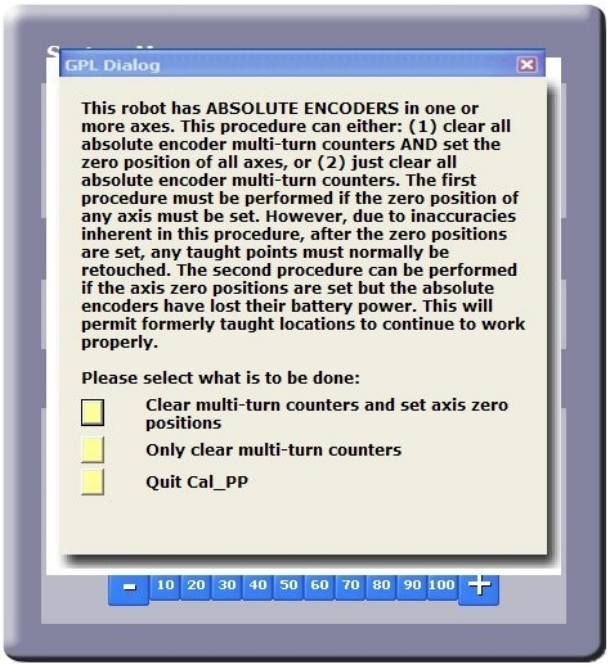

Copyright © 2026, Brooks Automation

Step	Action
14.	After calibration is complete, use the brake release button and move the Z-axis up from the hard stop. Failing to do this will produce an error as the robot is outside of the soft stop limits.
15.	Ensure that the pins are removed.
16.	Enable power and home the robot. Calibration does not take effect until the robot is homed.

Recovering from Corrupted PAC Files

PAC files are configuration files that determine the configuration of the robot for the software, including the robot factory calibration data. These files are stored in Flash RAM. Flash RAM is also used to store robot programs. The Flash RAM requires some time for a complete write cycle. During the write cycle, the console will display a flashing warning not to turn off robot power. If robot power is turned off during the Flash RAM write cycle, the Flash data may be lost or corrupted. If this happens, it is necessary to reload both the robot PAC files and any user programs that were stored in Flash RAM. This problem should typically not be encountered by a user unless the user is changing configuration files in the robot.

Brooks maintains a record of PAC files shipped with each robot Serial Number. If the PAC files have been corrupted, it is possible to get a back up copy from Brooks. The backup copy will contain the factory configuration and calibration data, but will not contain any changes, including any new calibration data, made after the robot has left the factory.

In order to allow the controller to recover from corrupted PAC files, a set of recovery boot up PAC files is loaded in a the system area of the Flash.

The following procedure outlines how to configure the controller to boot up in recovery mode.

Copyright © 2026, Brooks Automation

Step	Action
1.	Get a set of backup PAC Files from Brooks (support_preciseflex@brooks.com) or local backup.
2.	Remove the Inner Link Cover of the robot.
3.	Move Jumper J8 so it connects the two jumper posts. This will cause the factory default configuration files to be loaded at controller boot up. 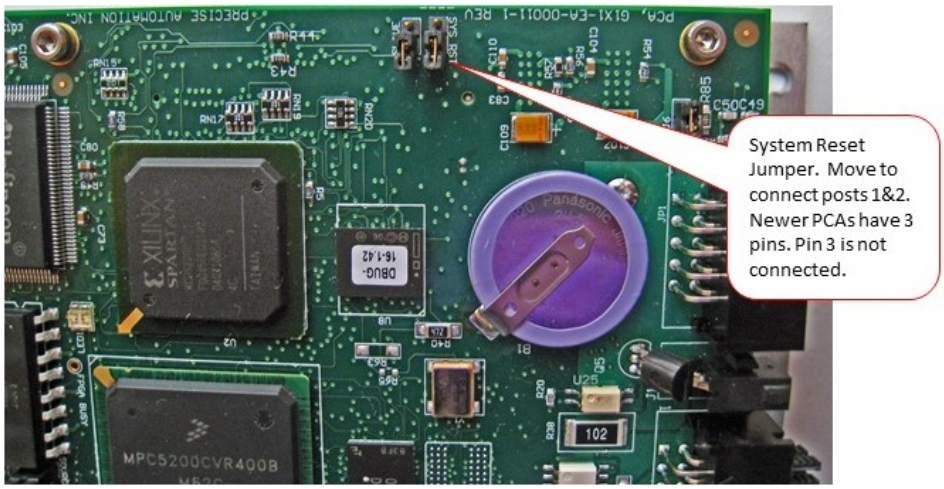
4.	Cycle the robot power to reboot the controller.
5.	In the Operator window, click on **Utilities/Backup and Restore**to display the *Backup and Restore Control* window. 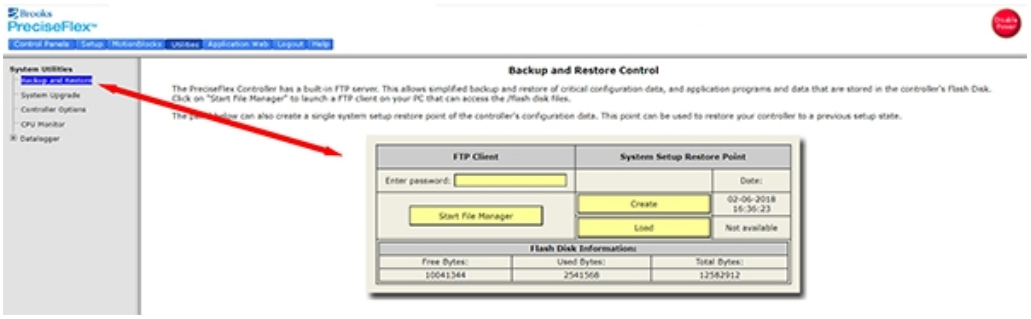

Copyright © 2026, Brooks Automation

Step	Action
6.	Click on **Start File Manager** to connect to an FTP utility. 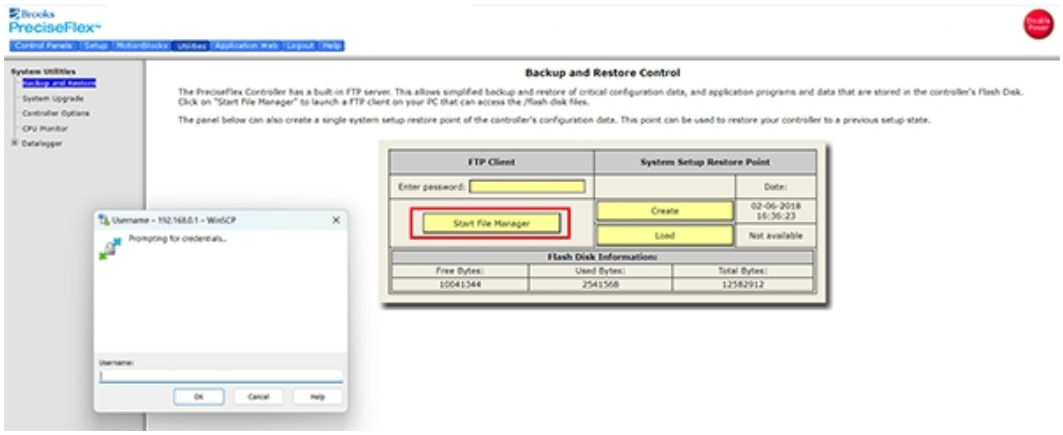
7.	Open the **Config** folder and paste the backup copy of the PAC files into this folder. 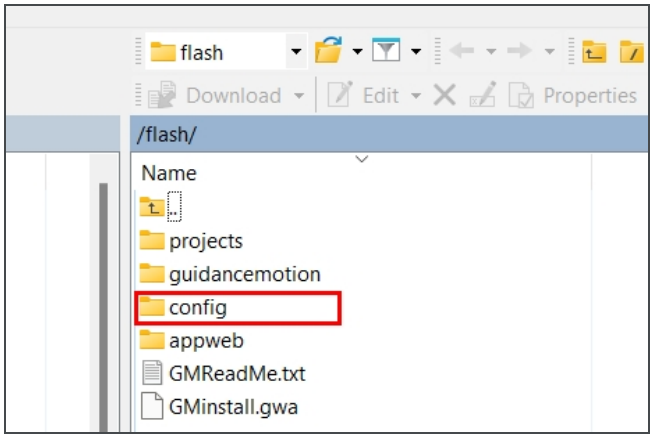
8.	Wait until the console prompt stops flashing, about 10-15 seconds.
9.	Turn off robot power.
10.	Restore Jumper J8 to its previous position.
11.	Reboot the robot. The PAC files should be restored and the robot should run.
12.	If the robot has ever been recalibrated since the back up PAC files were created, it will be necessary to recalibrate the robot, as the calibration files will be out of date.
13.	Replace the Inner Link Cover.

Copyright © 2026, Brooks Automation

Copyright © 2026, Brooks Automation

Appendices

Appendix A: Conditions of Acceptability

For use only in (or with) complete systems, the following items should be evaluated to determine the acceptability for use in the end user application:

- These devices shall be installed in compliance with the requirements for enclosure, mounting, electrical spacing, and segregation of the end-use equipment.
- The power supply and drives in this report have been evaluated as a system and they shall be installed accordingly. The suitability of any other installation manner shall be determined in the end product application.
- The front face has not been evaluated as an ultimate or part of the overall enclosure.
- Wait 7 minutes after removal of power before servicing equipment for the system capacitance to discharge below a 50 VDC level.
- The input and output connectors are suitable for factory wiring only.
- The spacings have been evaluated to Pollution Degree 2.
- These devices are intended for installation in a Pollution Degree 2 environment.
- These models are suitable for operation in a surrounding air temperature of 40°C.
- This system, power supply and motor drives, are suitable for use on a circuit capable of delivering not more than 1,500 rms symmetrical amperes, 250 VAC maximum.

Copyright © 2026, Brooks Automation

- The Motor Drive Series 6000 shall be provided with complete instructions as to how to replace the battery cell ending with the statement: "Dispose of used cell promptly. Keep away from children. Do not disassemble and do not dispose of in fire."
- Peak currents indicated in the nomenclature are temporary over-currents only, not intended for use as continuous ratings.

Copyright © 2026, Brooks Automation

Appendix B: Product Specifications

General Specification	Range
PERFORMANCE	
Payload	3 kg
Max Speed at TCP	1500 mm/sec (horizontal) 500 mm/sec2 (vertical)
Max Joint Speed	J1 - 500 mm/sec J2 - 360°/sec J3 - 720°/sec J4 - 720°/sec
Max Acceleration	1000 mm/sec2 with 0.5 kg payload
Repeatability	±0.090 mm at tool flange center
RANGE OF MOTION	
Joint 1 (Z) Axis	400, 750, 1160 mm
Joint 2	±93°
Joint 3 (Elbow)	±168°
Joint 4	+100° to +470° (±960° with servo gripper)
Horizontal Reach	588 mm (666 mm with servo gripper)
COMMUNICATIONS	
General	100 Mb Ethernet, TCP/IP Modbus/TCP RS232, at end-of-arm
E-stop	Dual-channel E-stop
Operator Interface	Web-based operator interface
Digital I/O	8 inputs, 8 outputs at base of robot Optically isolated, 24V @ 100 mA 2 in, 4 out for end-of-arm-tooling Remote I/O available
FACILITIES	
Power	90 to 132 VAC and 180 to 264 VAC Auto selecting, 50-60 Hz 100-250 watts typical operation DC power option available
Pneumatics	Two 3.2 mm OD (1.7 mm ID) airlines provided for end-of-arm-tooling. 4.9 bar max (71 PSI)
Controller Mounting	Embedded into robot base

Copyright © 2026, Brooks Automation

General Specification	Range
Air Lines	Two, 3.2 mm OD, 1.6 mm ID Max pressure 500 kba (75 PSI)
Weight	25 kg (400 mm Z-axis) 30 kg (750 mm Z-axis) 35 kg (1160 mm Z-axis)
Noise Level	< 50 dB(A)
SOFTWARE	
Programming	Programming via Guidance Development Studio (GDS) Guidance Programming Language (GPL) TCS API
Enhanced Functions	Hand Guiding (standard) Horizontal Compensation Z-Height Detection
PERIPHERALS AND ACCESSORIES	
General	IntelliGuide s23 IntelliGuide s60 IntelliGuide s23D (Dial Gripper)
Linear Rail	1.0, 1.5, and 2.0 M travel
Vision	IntelliGuide v23 Vision IntelliGuide v60 Vision
ENVIRONMENTAL SPECIFICATIONS	
Indoor	For indoor use only
Ambient Temperature	0°C to 40°C
Humidity Range	10 to 75%, non-condensing, non-corrosive
Storage and Shipment Temperature	-25°C to +55°C
Suitable use	Indoor use only
Altitude	Up to 3000 m
Voltage, single phase	100-240 VAC +/- 10%, 50/60 Hz
Mains cord rating, min	18 AWG, 3 conductor, 5 Amps min
Pollution Degree	2
Approved Cleaning Agents	IPA, 70% Ethanol/30% water, H2O2 Vapor up to 1000 ppm
IP rating	11
IK impact rating	IK08: 5 Joule

Copyright © 2026, Brooks Automation

Appendix C: PreciseFlex 3400 Spare Parts List

Refer to the spare parts list in the PreciseFlex 3400 Service Manual for detailed information.

NOTE: For help replacing spare parts, email

supportable

Appendix D: Preventative Maintenance

Every one to two years, the following preventative maintenance procedures should be performed. For robots that are continuously moving 24 hours per day, 7 days a week at moderate to high speeds, a one-year schedule is recommended. For robots with low duty cycles and low to moderate speeds, these procedures should be performed at least once every two years.

Preventative Maintenance, Checklist & Procedures

Check List	Procedure If Problem Detected
Check all belt tensions	Re-tension if necessary
Check air harness tubing in elbow if present, and theta axis for any wear	Replace if necessary
Replace timing belt in optional linear axis	Typically every 6,000 hours of continuous operation
Check all joints in “free mode” for low bearing friction and any sticking.	If a bearing is getting stiff, return to factory for bearing replacement.
Check second stage (long) Z belt for any squeaking	If noisy, add thick grease to front and rear edge of belt if necessary. (Shell 222 XP or similar). Z timing belt can get stiffer over time (2-3 years) and occasionally start squeaking against pulley flanges.
Check if front cover is rattling	If so, check .125 in ID by .062 in thick O rings on dowel pins in base plate under front cover for any deterioration and replace if necessary.
Check Cam Followers on J2 timing belt for grease leaking or discoloration.	Replace if necessary. Note that earlier units had a 9 mm wide timing belt and later units (2014, 2015) have a 12 mm wide timing and the Cam Followers are different. See "PreciseFlex 3400 Spare Parts List".
Replace slip ring	For units with electric gripper shipped before April 2015, replace the slip ring. For units shipped after April 2015, replace the slip ring every third inspection test.

Copyright © 2026, Brooks Automation

PreciseFlex 3400 PM Schedule

Component	Expected Life	Action
Slip ring	3-5 years	Replace component
J2 timing belt	5 years heavy use	Replace component
Ethernet cable	2-4 years	Replace component

Linear Axis PM Schedule

Component	Expected Life	Action
Ethernet cable	2-4 years	Replace component
Tape seals	2-4 years	Replace component
Tape seal rollers	2-4 years	Replace component
Timing belt	6,000 hours/duty cycle*	Replace component
E-chain harnessing	20,000 hours	Replace all cables

*For example, if rail operates at 50% duty cycle, expected life is 12,000 hours

Copyright © 2026, Brooks Automation

Appendix E: Safety Circuits for PreciseFlex 3400 3 kg Payload

14-Jun-17	PF3400								
Safety Circuit	Start up Test [1]	Redundant	Continuous Test	Diagnostic Coverage	MTTFdl, Years	Power Off On Failure	PL	Category Safety	Notes (PF3400t has redundant Estop and 48V power supply enable)
Estop	Yes	Yes	No	99%	100	Yes	d	3	Startup test forces Estop, checks 48V power disable, zero amp current
									Dual Estop circuits turns off amp enable and PWM
									Dual Estop circuits turnS off 48V power
									Stopping robot with hand turns off amp enable, PWM and 48V
Encoder Feedback	Yes	No	Yes	90%	58	Yes	d	3	Startup test checks encoder communication, prevents mtr power if fault
									Serial update at 8Khz w checksum, comm check, accel check
									Counter embedded in position word to confirm CPU read from FPGA
CPU Monitor	Yes	Yes	Yes	99%	100	Yes	d	3	Startup test forces CPU WD low, checks 48V power disabled
									Independent dual watchdog timers turn off amp enable, PWM and 48V
									Processor on safety board monitors main CPU. Disables 48V if failure.
Position Envelope Error	Yes	Yes	Yes	90%	57	Yes	d	3	Startup test checks encoder communication, prevents mtr power if fault
									Serial update at 8Khz w checksum, comm check, accel check
									SW watchdog in servo loop turns off amp enable, PWM and 48V
									Counter embedded in position word to confirm CPU read from FPGA
Power amp Fault	Yes	Yes	Yes	90%	100	Yes	d	3	Startup test confirms zero current when 48V enabled
									Excess current to ground or phase to phase triggers shutdown in 10 usec
									Saturated PID current command triggers shutdown in .050 sec
									Shorted transistor just locks up brushless motor
Collab Force Limit	Yes	Yes	Yes	90%	5W	Yes	d	3	Tests 2, 3, 4 above test HW. Motor driven against brake to test SW current limit.
									Position envelope error triggers fault, turns off power at amp and 48V
									Current saturation triggers separate fault, turns off power at amp and 48V
									Monitor function with WD turns off power at amp and 48V
									Monitor and CPU WD tested at startup turning off 48V
									Assymetric current limits limit Z force even with gravity load
Velocity Restrict	Yes	Yes	Yes	99%	93	Yes	d	3	Startup test, sets flag to trigger this error, then resets
									Checks velocity limit in FPGA in addition to check in CPU servo software
									1. Cat 2 and Cat 3 require startup test before enabling motor power

Safety Circuits for PreciseFlex 3400 3 kg Payload, Checklist

Copyright © 2026, Brooks Automation

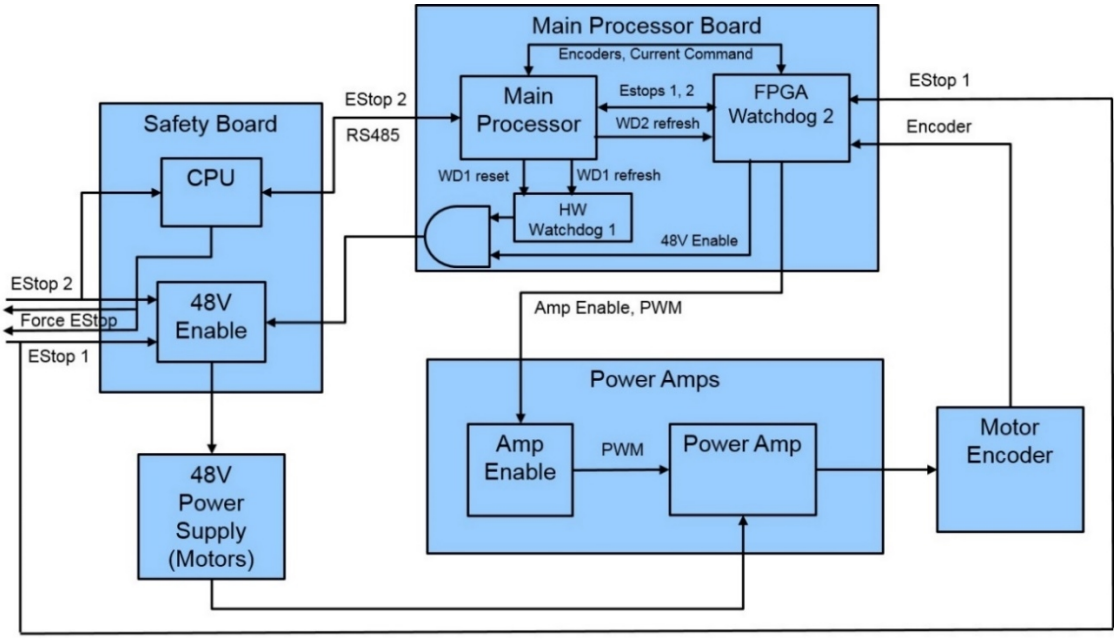

PreciseFlex 3400 3 kg Safety Circuit

Appendix F: Low Voltage Option

WARNING

Incorrect wiring may result in permanent damage to the robot. The 24 V supply line must never exceed 26 VDC. The 48 V supply line must never exceed 53 VDC.

The PreciseFlex 3400 can be ordered in a low-voltage DC power configuration option. This allows the robot to be run off of the DC power from a mobile robot battery rather than from the AC power from a wall outlet.

When in this configuration, the integrated power supplies are removed, and the standard power plug is removed. Instead, the robot comes with a exposed wire leading from the base of the robot that users can attach to a DC power source. Users will need to provide their own 48 VDC safety power cutoff relay utilizing the Enable (EN) signal. See the "Example Integration" section for information on how this can be wired up. The right side of this cable is what is exposed for user integration.

See the graphic below.

Copyright © 2026, Brooks Automation

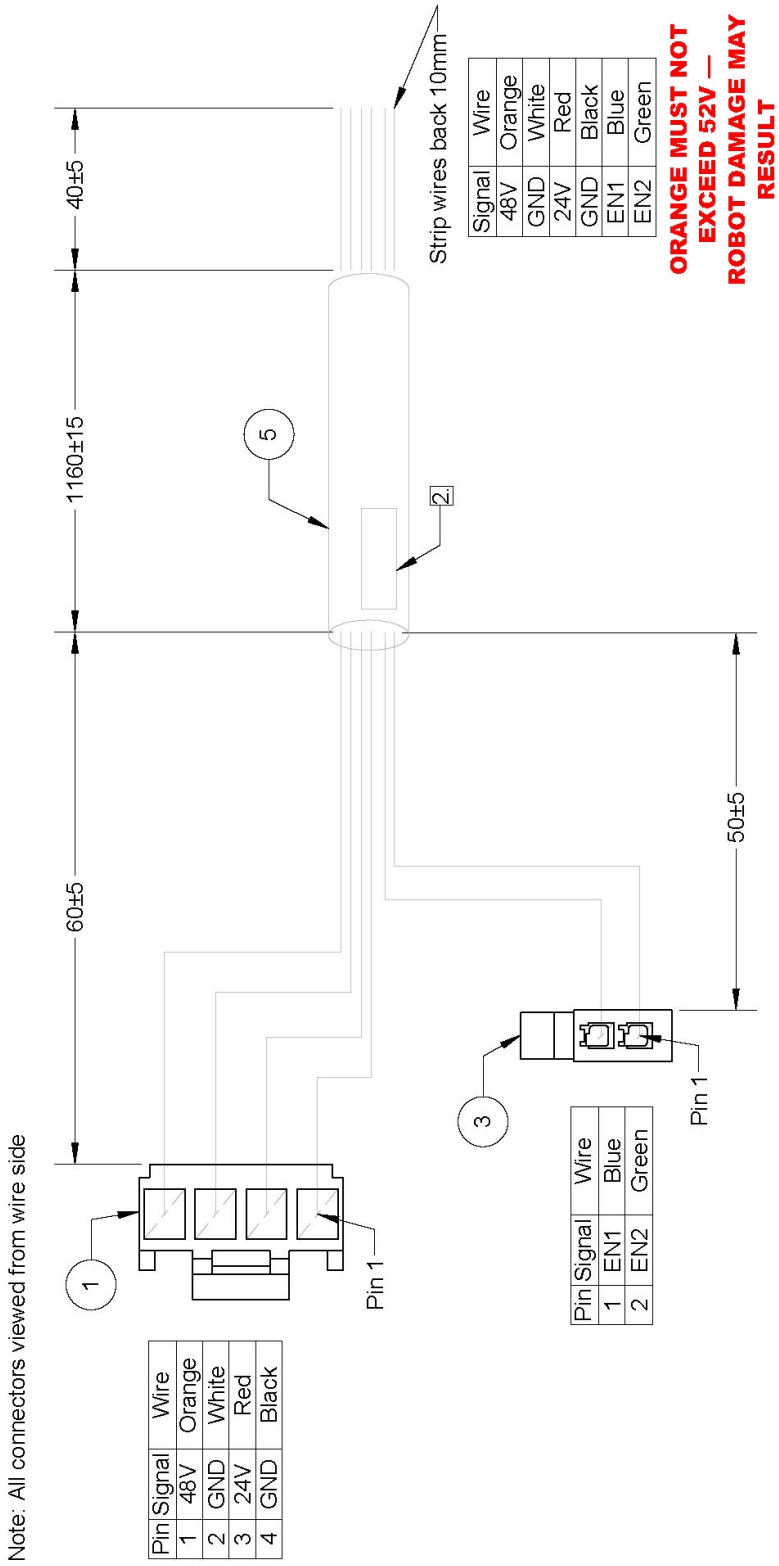

Item	Brooks PN	Description	Vendor	Vendor PN	Quantity
1	0000-EC-H0310	CONN HOUSING VH 4POS 3.96MM WHT	JST	VHR-4N	1
2	0000-EC-H0120	CONN SOCKET 18-22AWG CRIMP TIN	JST	SVH-21T-1.1	4
3	0000-EC-H0168	CONN RCPT 3MM 2POS DL MATE-N-L	TE	794617-2	1
4	0000-EC-H0294	CONN SOCKET 20-24AWG CRIMP TIN	TE	794610-1	2
5	NA	Cable, 6 Cond, 18 AWG, Shielded	Alpha	5386C	1260mm

Harness, Low- Voltage Power, Pigtail

High Power Enable Signal

The High Power Enable signal is used by the robot to enable and disable the 48 V power supply when required to meet ISO 10218 safety standards for E-stop and other safety functions. This feature is available on EN1 and EN2. This safety feature is enabled by default.

If the feature is enabled and the EN1/EN2 pins are not connected to anything, robot operation will be prevented. This safety feature can be disabled through software configuration if desired. If the feature is disabled, robot operation will not be affected by EN1/EN2

Integrating High Power Enable

EN1 and EN2 act as a current switch. When the robot enables high power, it switches current flow on between EN1 and EN2. When the robot disables high power, it switches current flow off between EN1 and EN2. The internal optocoupler is rated up to 24 V, 100 mA.

Copyright © 2026, Brooks Automation

Example Integration

Use SPDT relay to connect 48 V supply to 48 V input. The robot max power draw is 400 W.

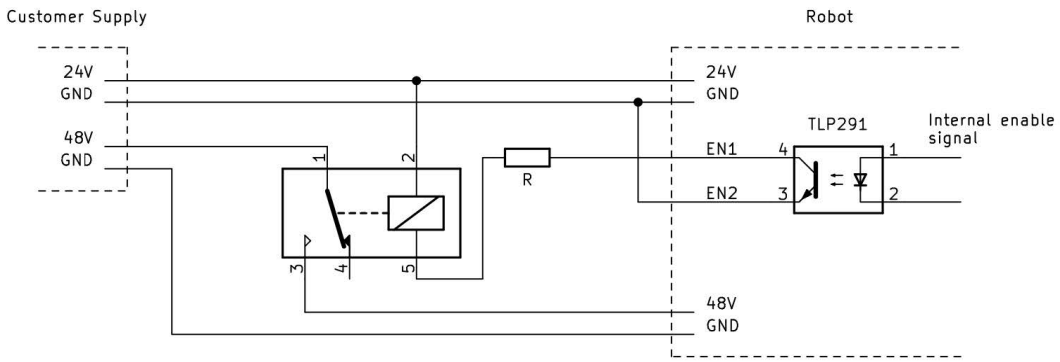

Step	Action
1.	Select relay with contact rated for >8.3 A and 24 V coil.
2.	Connect the positive end of the relay coil to 24 V.
3.	Connect negative end of relay coil to EN1.
4.	Select R based on relay. 1 kΩ typical. Do not draw more than 100 mA through EN1.
5.	Connect EN2 to ground.

Copyright © 2026, Brooks Automation

Disabling High Power Enable

The safety feature can be disabled in the robot's configuration by following the steps below.

Step	Action
1.	Connect a PC to the robot, open a browser, and enter the IP address 192.168.0.1 in the browser to display the controller interface. 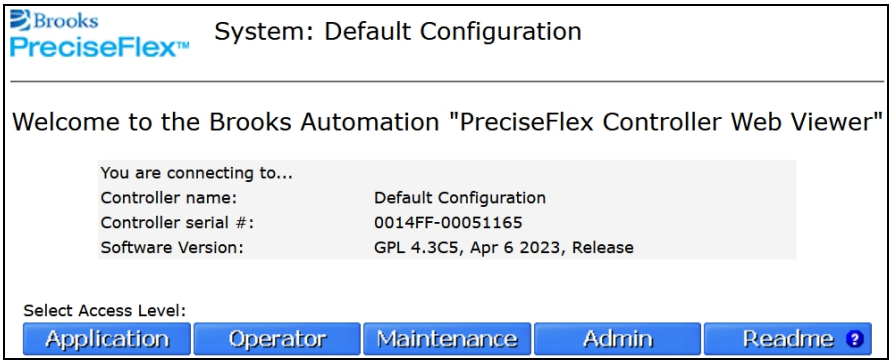
2.	Navigate to **Admin** > **Setup** > **Parameter Database** > **Controller** > **System ID** 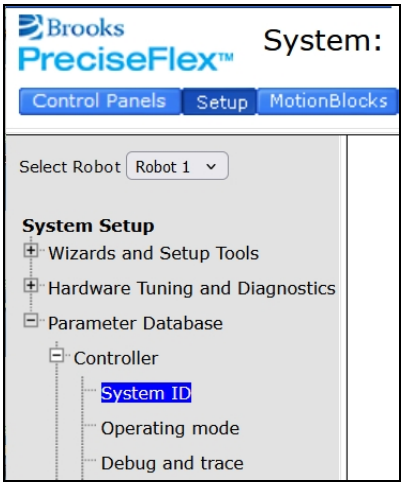

Copyright © 2026, Brooks Automation

Step	Action
3.	Set ID 117 (“Safety mode”) = 0. 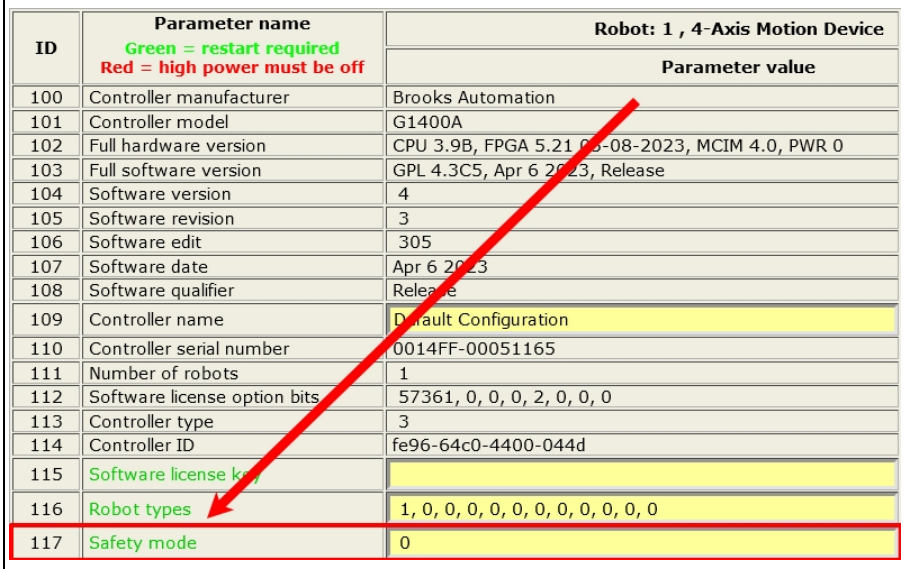 ID | Parameter name (Green = restart required, Red = high power must be off) | Robot: 1 , 4-Axis Motion Device — Parameter value 100 | Controller manufacturer | Brooks Automation 101 | Controller model | G1400A 102 | Full hardware version | CPU 3.9B, FPGA 5.21 03-08-2023, MCIM 4.0, PWR 0 103 | Full software version | GPL 4.3C5, Apr 6 2023, Release 104 | Software version | 4 105 | Software revision | 3 106 | Software edit | 305 107 | Software date | Apr 6 2023 108 | Software qualifier | Release 109 | Controller name | Default Configuration 110 | Controller serial number | 0014FF-00051165 111 | Number of robots | 1 112 | Software license option bits | 57361, 0, 0, 0, 2, 0, 0, 0 113 | Controller type | 3 114 | Controller ID | fe96-64c0-4400-044d 115 | Software license key | 116 | Robot types | 1, 0, 0, 0, 0, 0, 0, 0, 0, 0, 0, 0 117 | Safety mode | 0
4.	Click **Set new values** 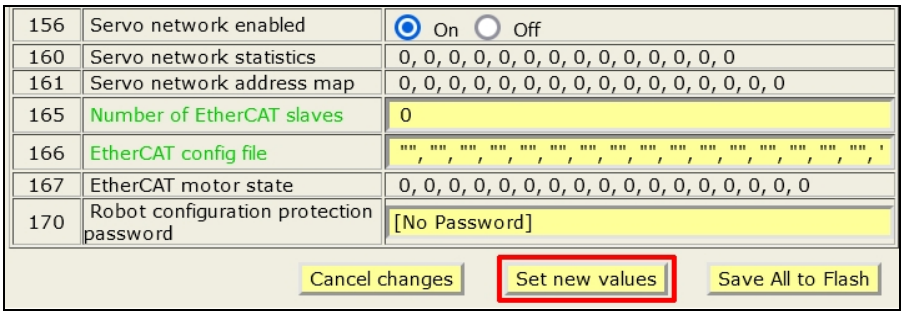 156 | Servo network enabled | On Off 160 | Servo network statistics | 0, 0, 0, 0, 0, 0, 0, 0, 0, 0, 0, 0, 0, 0 161 | Servo network address map | 0, 0, 0, 0, 0, 0, 0, 0, 0, 0, 0, 0, 0, 0, 0, 0 165 | Number of EtherCAT slaves | 0 166 | EtherCAT config file | "", "", "", "", "", "", "", "", "", "", "", "", "", "", "", "", "", 167 | EtherCAT motor state | 0, 0, 0, 0, 0, 0, 0, 0, 0, 0, 0, 0, 0, 0, 0, 0 170 | Robot configuration protection password | [No Password] Cancel changes | Set new values | Save All to Flash

Step	Action
5.	Navigate to **Admin** > **Setup** > **Parameter Database** > **Robot** > **Joint/Cartesian Control** > **Basic Parameters** 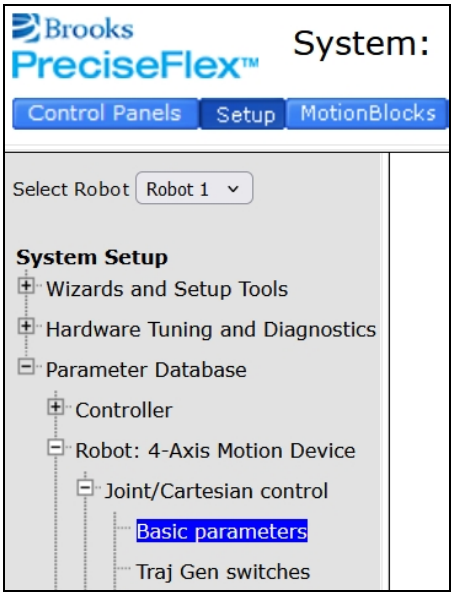
6.	Set ID 2031 (“Enhanced safety mode”) = 0 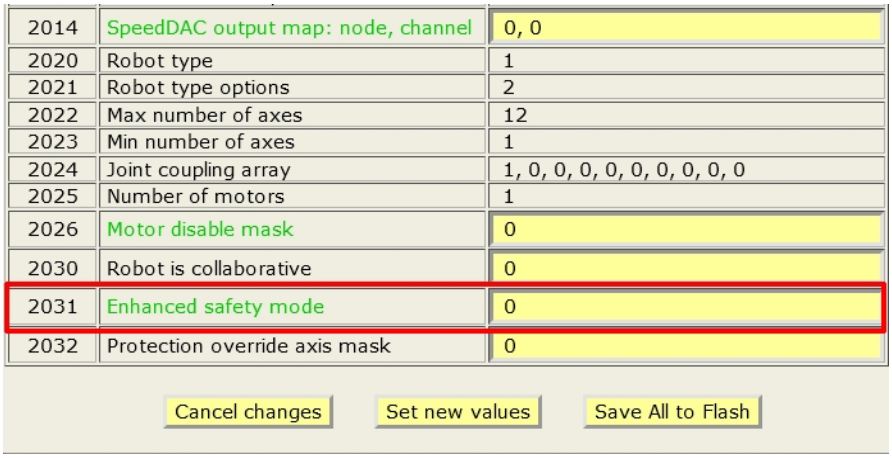

Copyright © 2026, Brooks Automation

Step	Action
7.	Click **Set new values** and then click **Save All to Flash**. 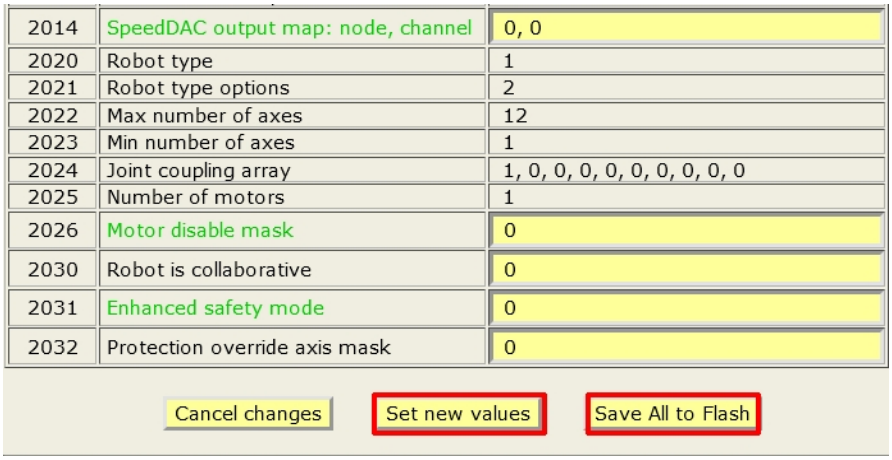

Appendix G: Optional IO FFC in Outer Link

In cases where the servo gripper is not needed, the FFC board can be used to control the gripper. The FFC comes with four digital outputs and four configurable inputs. These IOs are directly connected to the main robot controller.

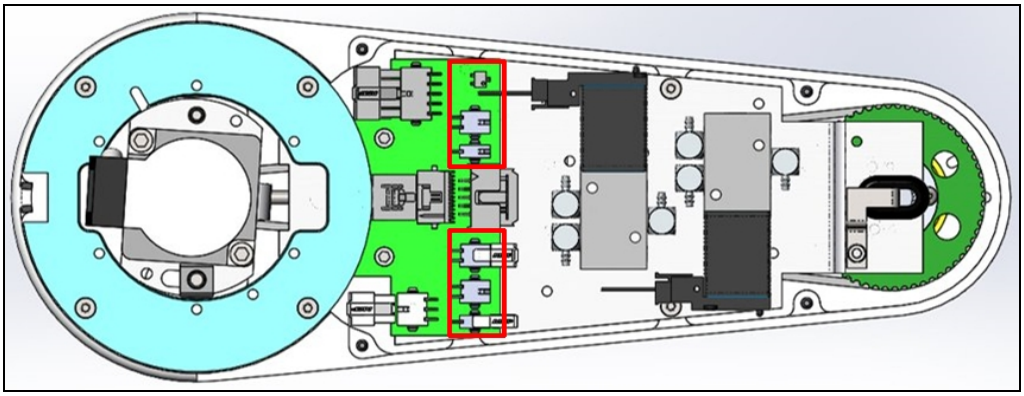

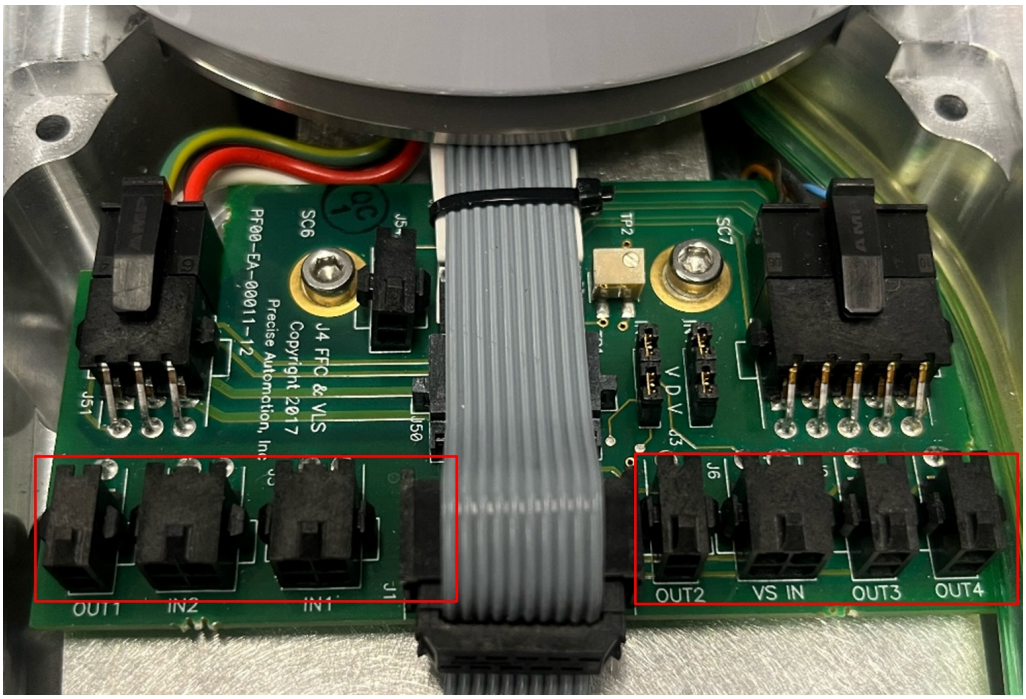

FFC Board Pinouts

Copyright © 2026, Brooks Automation

Digital Outputs

This is the pinout for the digital outputs (OUT 1-4) of the FFC Board.

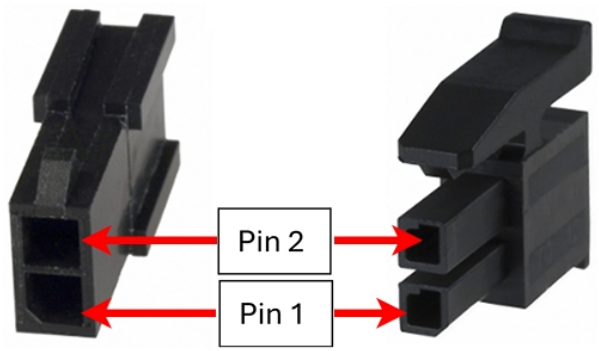

Outputs (OUT 1-4)

Pin	Signal
1.	Output
2.	GND

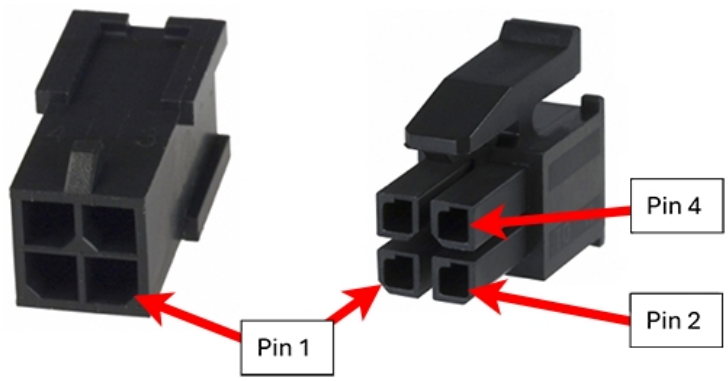

Copyright © 2026, Brooks Automation

VS IN = Vacuum Sensor Input. Jumpers J7 and J8 determine VS IN's function.

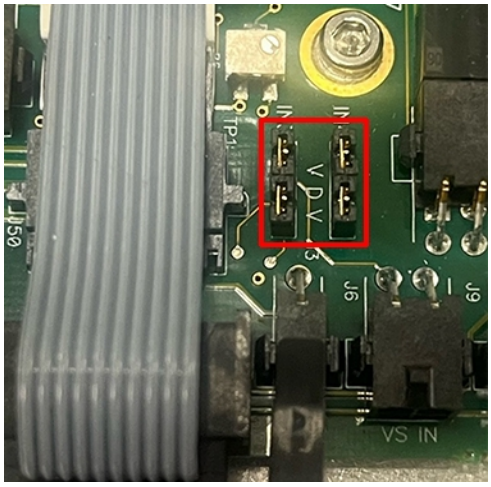

Digital Inputs 3 and 4 are available (Jumpers both on pins 2-3)

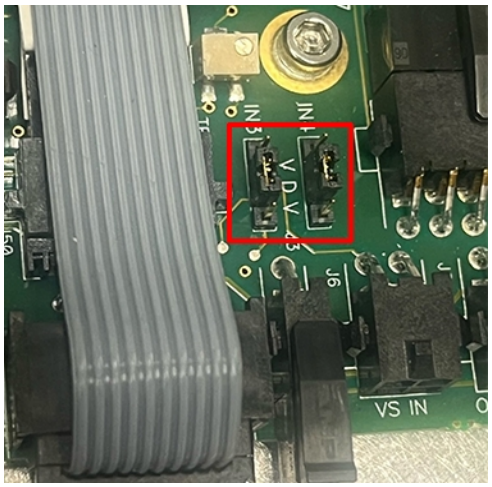

Analog Input (Jumpers on pins 1-2 and 3-4)

Digital Inputs

These are the pinouts for the digital outputs (IN1-2) of the FFC Board:

Pin	Signal
1.	24 V
2.	GND
3.	Input
4.	Unused

Vacuum Sensor Inputs

The FFC Board supports two configurable inputs (IN3-4) in either digital or analog configuration for the VS IN or vacuum sensor input. Jumpers J7 and J8 determine VS IN's function. A jumper across Pins 2 & 3 puts it in digital mode, where as jumpers across 1 & 2 and 3 & 4 put it into

Copyright © 2026, Brooks Automation

analog mode. When in analog mode, the sensor takes an analog input between 0 VDC and 24 VDC.

VS Digital Pinout

Pin	Signal
1.	24 V
2.	GND
3.	Input #4
4.	Input #3

VS Analg Pinout

Pin	Signal
1.	24 V
2.	GND
3.	Vacuum Sensor Output 1
4.	Vacuum Sensor Output 2

Copyright © 2026, Brooks Automation

This is the internal electrical diagram for the FFC Board for the VS IN:

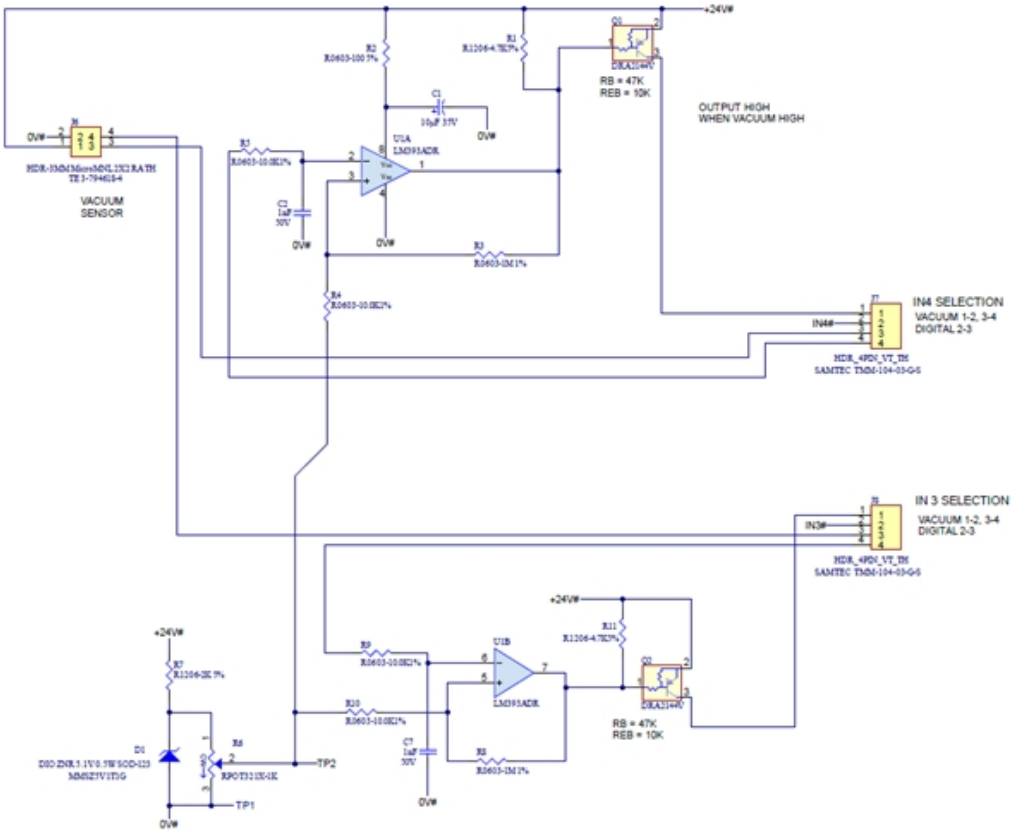

Copyright © 2026, Brooks Automation

Appendix H: Table A2 from ISO/TS 15066: 2016, Biomechanical Limits

Body region	Specific body area		Quasi-static contact		Transient contact	
			Maximum permissible pressure [a] p_S N/cm²	Maximum permissible force [b] N	Maximum permissible pressure multiplier [c] P_T	Maximum permissible force multiplier [c] F_T
Skull and forehead [d]	*1*	*Middle of forehead*	*130*	*130*	*not applicable*	*not applicable*
	2	*Temple*	*110*		*not applicable*	
Face [d]	*3*	*Masticatory muscle*	*110*	*65*	*not applicable*	*not applicable*
Neck	4	Neck muscle	140	150	2	2
	5	Seventh neck muscle	210		2	
Back and shoulders	6	Shoulder joint	160	210	2	2
	7	Fifth lumbar vertebra	210		2	2
Chest	8	Sternum	120	140	2	2
	9	Pectoral muscle	170		2	
Abdomen	10	Abdominal muscle	140	110	2	2
Pelvis	11	Pelvic bone	210	180	2	2
Upper arms and elbow joints	12	Deltoid muscle	190	150	2	2
	13	Humerus	220		2	
Lower arms and wrist joints	14	Radial bone	190	160	2	2
	15	Forearm muscle	180		2	
	16	Arm nerve	180		2	

[a] These biomechanical values are the result of the study conducted by the University of Mainz on pain onset levels. Although this research was performed using state-of-the-art testing techniques, the values shown here are the result of a single study in a subject area that has not been the basis of extensive research. There is anticipation that additional studies will be conducted in the future that could result in modification of these values. Testing was conducted using 100 healthy adult test subjects on 29 specific body areas, and for each of the body areas, pressure and force limits for quasi-static contact were established evaluating onset of pain thresholds. The maximum permissible pressure values shown here represent the 75th percentile of the range of recorded values for a specific body area. They are defined as the physical quantity corresponding to when pressures applied to the specific body area create a sensation corresponding to the onset of pain. Peak pressures are based on averages with a resolution size of 1 mm². The study results are based on a test apparatus using a flat (1,4 × 1,4) cm (metal) test surface with 2 mm radius on all four edges. There is a possibility that another test apparatus could yield different results. For more details of the study, see Reference [5].

[b] The values for maximum permissible force have been derived from a study carried out by an independent organization (see Reference [6]), referring to 188 sources. These values refer only to the body regions, not to the more specific areas. The maximum permissible force is based on the lowest energy transfer criteria that could result in a minor injury, such as a bruise, equivalent to a severity of 1 on the Abbreviated Injury Scale (AIS) established by the Association for the Advancement of Automotive Medicine. Adherence to the limits will prevent the occurrence of skin or soft tissue penetrations that are accompanied by bloody wounds, fractures or other skeletal damage and to be below AIS 1. They will be replaced in future by values from a research more specific for collaborative robots.

[c] The multiplier value for transient contact has been derived based on studies which show that transient limit values can be at least twice as great as quasi-static values for force and pressure. For study details, see References [2], [3], [4] and [7].

[d] Critical zone (*italicized*)

Copyright © 2026, Brooks Automation

Body region	Specific body area		Quasi-static contact		Transient contact	
			Maximum permissible pressure [a] p_s N/cm²	Maximum permissible force [b] N	Maximum permissible pressure multiplier [c] P_T	Maximum permissible force multiplier [c] F_T
Hands and fingers	17	Forefinger pad D	300	140	2	2
	18	Forefinger pad ND	270		2	
	19	Forefinger end joint D	280		2	
	20	Forefinger end joint ND	220		2	
	21	Thenar eminence	200		2	
	22	Palm D	260		2	
	23	Palm ND	260		2	
	24	Back of the hand D	200		2	
	25	Back of the hand ND	190		2	
Thighs and knees	26	Thigh muscle	250	220	2	2
	27	Kneecap	220		2	
Lower legs	28	Middle of shin	220	130	2	2
	29	Calf muscle	210		2	

[a] These biomechanical values are the result of the study conducted by the University of Mainz on pain onset levels. Although this research was performed using state-of-the-art testing techniques, the values shown here are the result of a single study in a subject area that has not been the basis of extensive research. There is anticipation that additional studies will be conducted in the future that could result in modification of these values. Testing was conducted using 100 healthy adult test subjects on 29 specific body areas, and for each of the body areas, pressure and force limits for quasi-static contact were established evaluating onset of pain thresholds. The maximum permissible pressure values shown here represent the 75th percentile of the range of recorded values for a specific body area. They are defined as the physical quantity corresponding to when pressures applied to the specific body area create a sensation corresponding to the onset of pain. Peak pressures are based on averages with a resolution size of 1 mm². The study results are based on a test apparatus using a flat (1,4 × 1,4) cm (metal) test surface with 2 mm radius on all four edges. There is a possibility that another test apparatus could yield different results. For more details of the study, see Reference [5].

[b] The values for maximum permissible force have been derived from a study carried out by an independent organization (see Reference [6]), referring to 188 sources. These values refer only to the body regions, not to the more specific areas. The maximum permissible force is based on the lowest energy transfer criteria that could result in a minor injury, such as a bruise, equivalent to a severity of 1 on the Abbreviated Injury Scale (AIS) established by the Association for the Advancement of Automotive Medicine. Adherence to the limits will prevent the occurrence of skin or soft tissue penetrations that are accompanied by bloody wounds, fractures or other skeletal damage and to be below AIS 1. They will be replaced in future by values from a research more specific for collaborative robots.

[c] The multiplier value for transient contact has been derived based on studies which show that transient limit values can be at least twice as great as quasi-static values for force and pressure. For study details, see References [2], [3], [4] and [7].

[d] Critical zone (*italicized*)

Copyright © 2026, Brooks Automation

Appendix I: Torque Values for Screws

Use these torque values for all screws and fasteners unless otherwise stated.

Torque Values in Newton-Meters

	Zinc	SS	Zinc	SS	Zinc	SS
Screw Size M	SHCS	SHCS	BHCS	BHCS	FHCS	FHCS
1.6	0.18	0.15	0.00	0.00	0.00	0.00
2	0.37	0.31	0.00	0.00	0.00	0.00
2.5	0.77	0.64	0.00	0.00	0.00	0.00
3	1.34	1.12	0.56	0.51	0.83	0.75
4	3.16	2.63	1.31	1.17	1.53	1.38
5	6.48	5.40	2.66	2.39	3.11	2.79
6	10.96	9.14	4.50	4.05	5.40	4.86

Copyright © 2026, Brooks Automation